DOOSAN

DBC series

Horizontal Boring Machine

DBC series

DBC 110S
DBC 130S / SL
DBC 110Ⅱ
DBC 160 / L

MACHINE GREATNESS™

Basic Information

Diverse Line-up
High-Rigidity &
High-Precision

Detailed Information

Options
Applications
Diagrams
Specifications

Customer Support Service

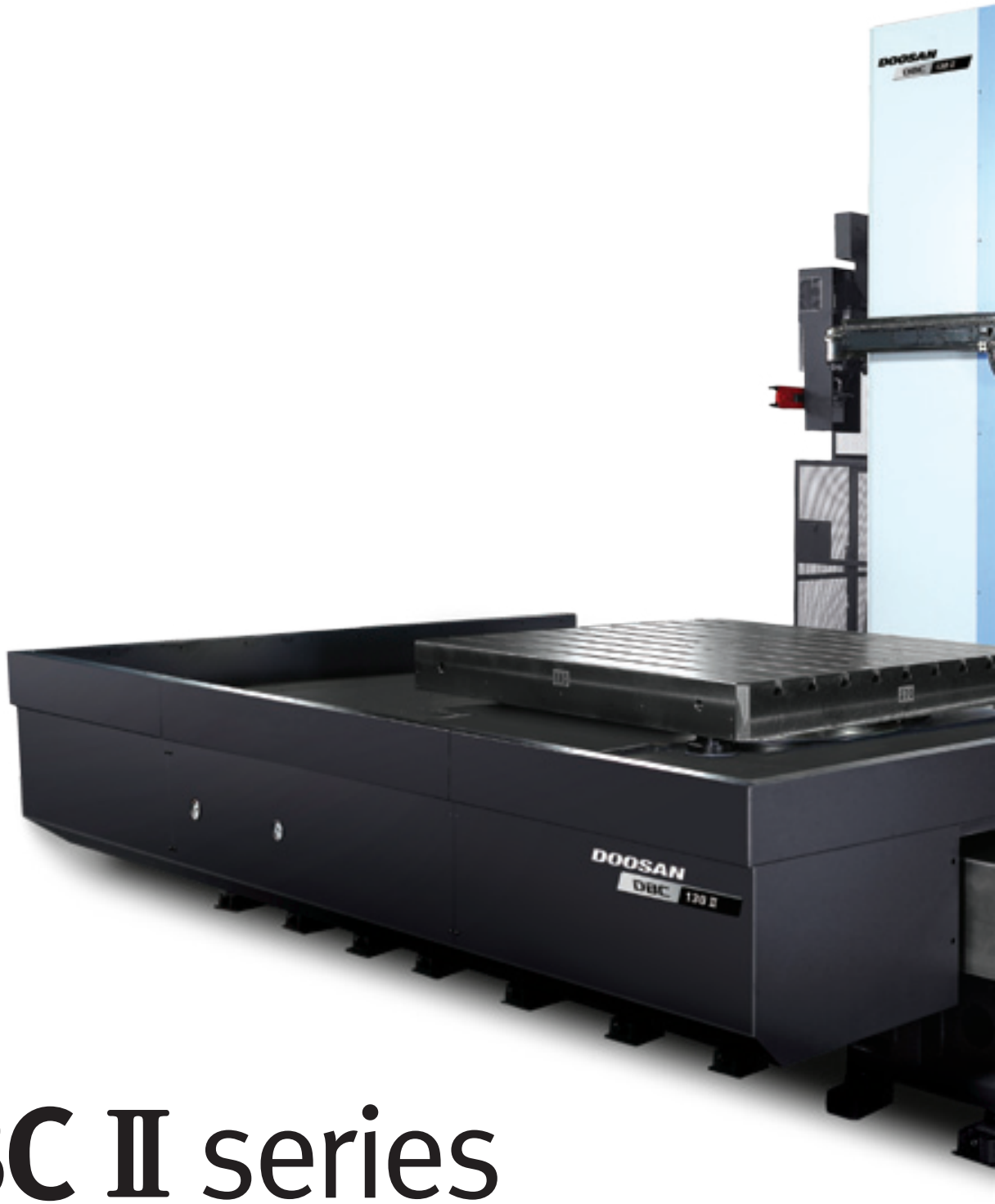

DBC Ⅱ series
DBC S series

Column Moving Type NC Boring Machine Featuring the State-of-the-Art Technologies

The DBC series, ranging from compact to super-size models, satisfies customers' requirements with DOOSAN's advanced technical prowess. A product line-up has been established for processing from middle to largest size parts including die / mold parts. We are improving productivity and creating values for our customers on the basis of our design improvements including enhanced operating convenience and efficiency.

Contents

02 Product Overview

Basic Information

04 Diverse Line-up
08 High-Rigidity & High-Precision Structure

Detailed Information

12 Standard / Optional Specifications
16 Application
19 Diagrams
26 Machine / NC Unit Specifications

34 Customer Support Service

Diversified Line-up for Faster Response to Customers' Requirements

The DBC Series offers a wide line-up from compact to large models, from heavy-duty type to high-speed mold processing type.

- DBC Ⅱ series
- DBC S series

Enhanced Performance through High-Rigidity & High-Precision Structure

A high-rigidity and high-precision structure has been adopted to improve heavy-duty machining performance.

- A high-rigidity and high-precision structure has been adopted to improve heavy-duty machining performance.
- B-axis rotary table equipped with high-precision encoder as a standard
- B-axis rotary table equipped with high-precision encoder as a standard

Increased Convenience and Productivity

The DBC Series offers various options and customized control functions for maximum user convenience.

- Automatic Tool Changer (ATC)
- Automatic Pallet Changer (APC)
- Various head attachments
- Doosan Easy Operation package

Product Overview

Basic Information

Diverse Line-up
High-Rigidity &
High-Precision

Detailed Information

Options
Applications
Diagrams
Specifications

Customer Support Service

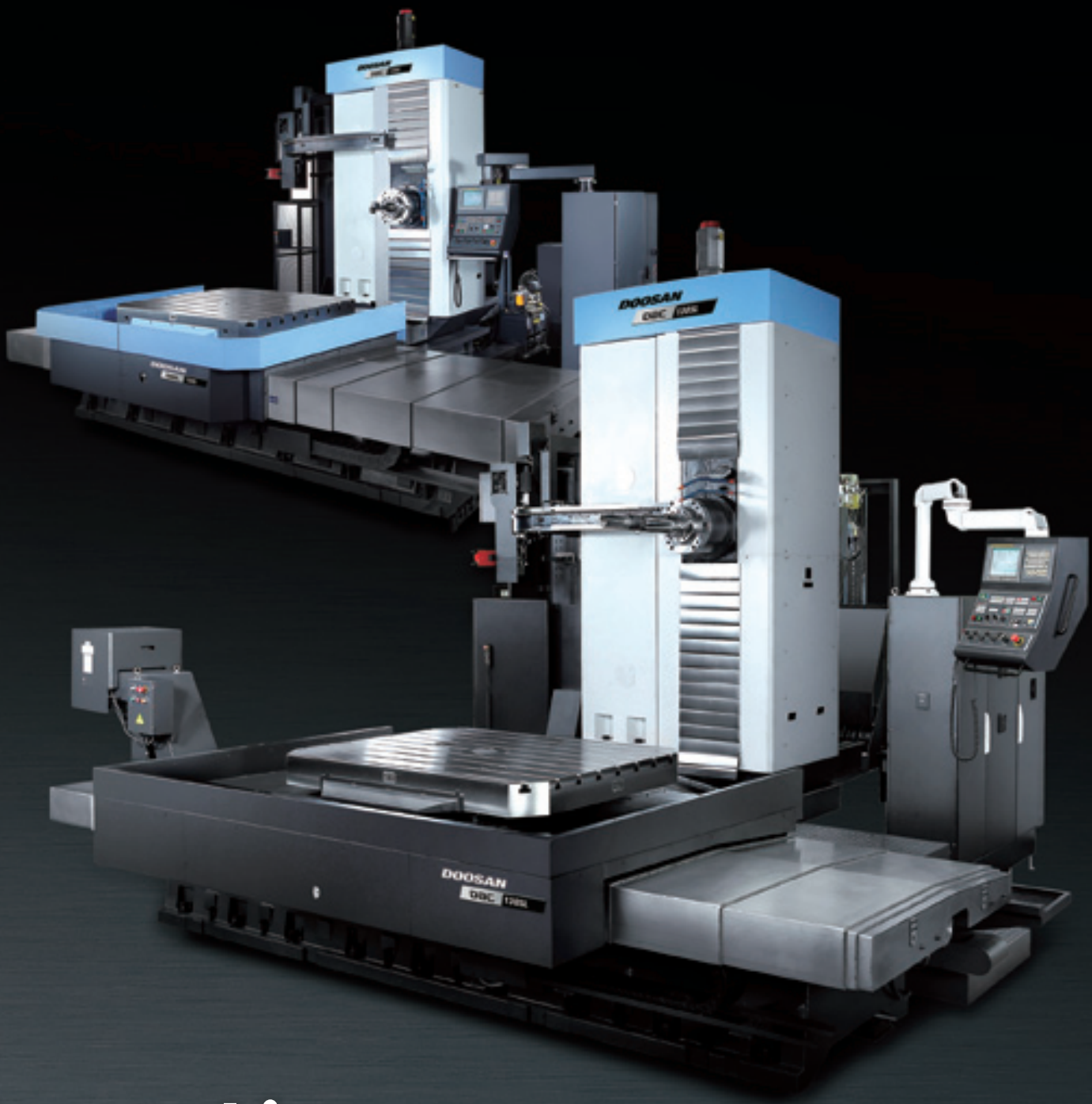

Diverse Line-up

Complete line-up ranging from compact to super-large types, and from heavy-duty to high-speed machining models is prepared for better and faster response to customer requests.

Optimal Solutions

Diverse Line-up

The DBC series provides various models covering compact, multi-functional, heavy duty and large workpieces.

Spindle

Nose-type head structure allows easy access to the workpiece and minimal protrusion of boring spindle enables stable cutting.

Diverse Line-up

The DBC series provides a wide line-up of models covering compact, multi-functional, heavy loads and large workpieces.

DBC S series

Compact type DBC 110S / 130S / 130SL

- Designed in compact size for small-medium size works
- Compact structure minimizes machine footprint

DBC 110S / 130S New

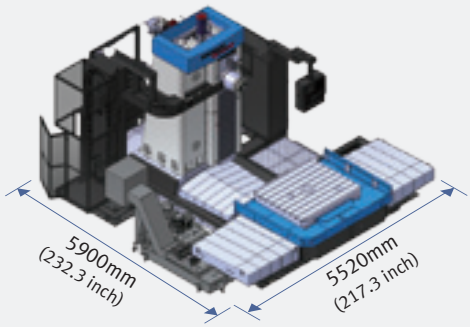

DBC 130SL New

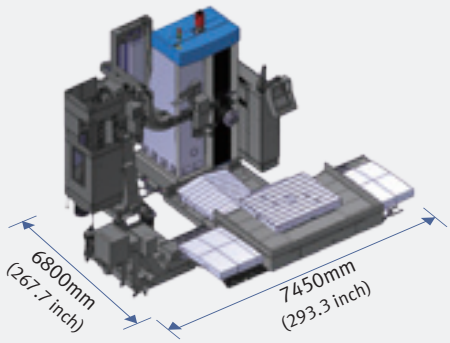

DBC Ⅱ series

Multi-purpose (Standard) DBC 110 II / 130 II / 250 II

- A best-selling, standard model with a sales record of more than 1,000 units for the last decade – continuously upgraded with long-term design know-how and production technology.
- Shortest delivery time by modular system design.

Spindle speed

4000 r/min

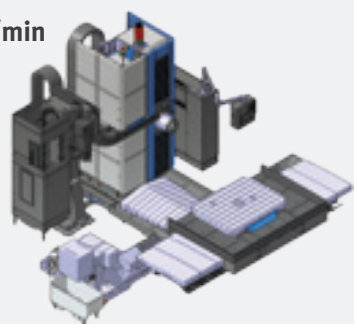

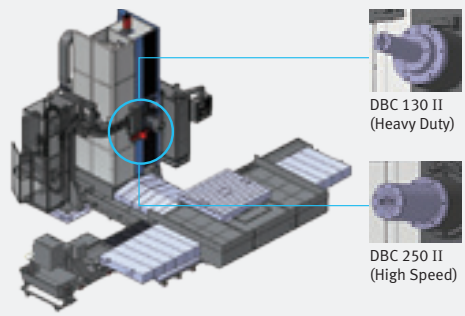

Large workpieces DBC 130L II / 160 / 160L / 250L II

- Suitable for machining large workpieces

X / Y / Z axes travel distance

4000 / 2500 / 2000 mm

(157.5 / 98.4 / 78.7 inch)

Max. workpiece diameter (without splash guard)

DBC 130 Ⅱ / 250 Ⅱ

Ø3900 mm **(153.5 inch)**

DBC 130L Ⅱ / 160 / 160L / 250L Ⅱ

Ø4800 mm **(189.0 inch)**

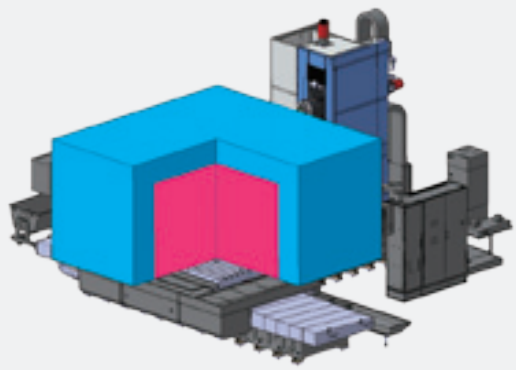

Spindle

Nose-type head structure allows easy access to the work piece and minimal protrusion of boring spindle enables stable cutting operation.

Stable cutting performance of highly-rigid spindle

Supported by highly-rigid bearings, the spindle is designed to bear very high axial working load. In addition, the spindles of the DBC Series have further reinforced rigidity providing improved cutting performance when the W-axis is in protruding position.

DBC S series

DBC 110S / DBC 130S / DBC 130SL

Offer high-speed, high-power spindles to different boring sizes for higher productivity

Model	Spindle Speed r/min	Boring spindle diameter mm (inch)	Quill Diameter mm (inch)	
DBC 110S	3000	110 (4.3)	-	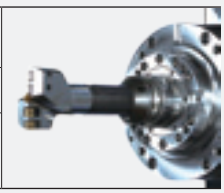
DBC 130S DBC 130SL	2500	130 (5.1)	-	

DBC Ⅱ series

DBC 110 Ⅱ

High-speed, high-performance spindle

Spindle Speed r/min	Boring spindle diameter mm (inch)	Quill diameter mm (inch)	
4000	110 (4.3)	-	

DBC 130 Ⅱ / L Ⅱ

High-power, high-torque spindle for heavy-duty machining

Spindle Speed r/min	Boring spindle diameter mm (inch)	Quill diameter mm (inch)	
3000	130 (5.1)	-	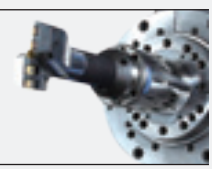

DBC 160 / L

High-power spindle for powerful cutting

Spindle Speed r/min	Boring spindle diameter mm (inch)	Quill diameter mm (inch)	
2000	160 (6.3)	-	

DBC 250 Ⅱ / L Ⅱ

High-speed, high-precision built-in Quill spindle

- Powerful Quill (Ø250mm) feed system (W-axis travel distance: 500 mm)
- Greased-type lubrication for the spindle bearings
- Stable thermal error of the spindle over a long-term operation

Spindle Speed r/min	Boring spindle diameter mm (inch)	Quill diameter mm (inch)	
6000	-	250 (9.8)	

* { } : Option

* Note1) Please contact us if you wish to high power spindle. (45 / 37 kW) (60.3 / 49.6 Hp)

Spindle Power – Torque Diagram

The powerful spindle motor further improves productivity.

DBC S series

DBC 110S

Spindle speed : 3000 r/min **Spindle motor : 26 / 22 kW (34.9 / 29.5 Hp)**

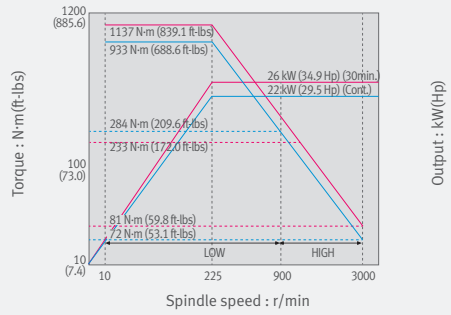

DBC 130S /SL

Spindle speed : 2500 r/min **Spindle motor : 37 / 30 kW (49.6 / 40.2 Hp)**

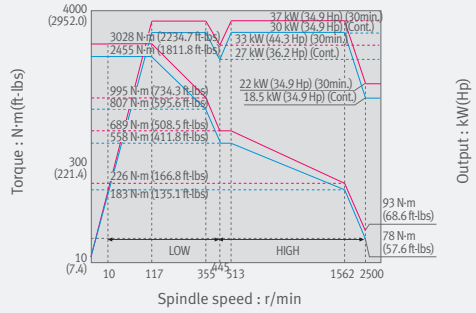

DBC Ⅱ series

DBC 110 Ⅱ

Spindle speed : 4000 r/min **Spindle motor : 26 / 22 kW (34.9 / 29.5 Hp)**

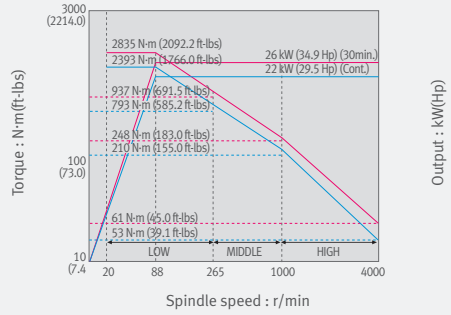

DBC 110 Ⅱ

Spindle speed : 4000 r/min **Spindle motor : 45 / 37 kW (60.3 / 49.6 Hp)** option

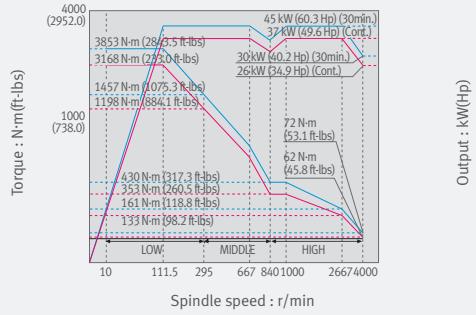

DBC 130 Ⅱ / 130L Ⅱ

Spindle speed : 3000 r/min **Spindle motor : 26 / 22 kW (34.9 / 29.5 Hp)**

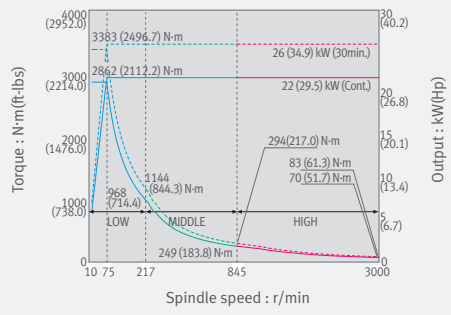

DBC 130 Ⅱ / 130L Ⅱ

Spindle speed : 3000 r/min **Spindle motor : 45 / 37 kW (60.3 / 49.6 Hp)** option

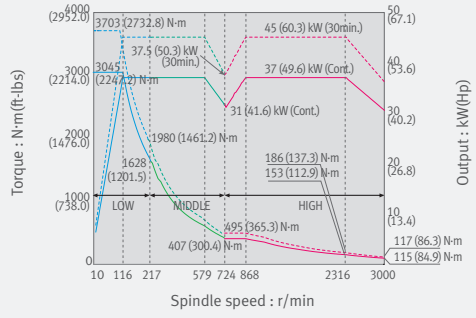

DBC 160 / L

Spindle speed : 2000 r/min **Spindle motor : 45 / 37 kW (60.3 / 49.6 Hp)**

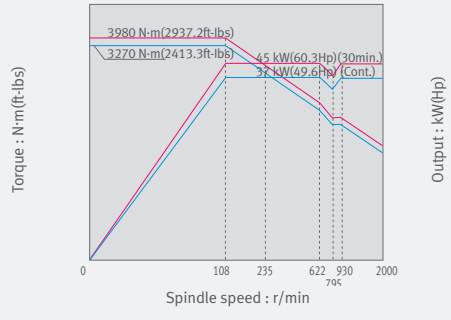

DBC 250 / 250 L Ⅱ

Spindle speed : 6000 r/min **Spindle motor : 30 / 22 kW (40.2 / 29.5 Hp)**

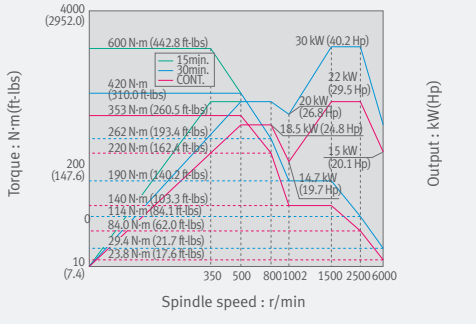

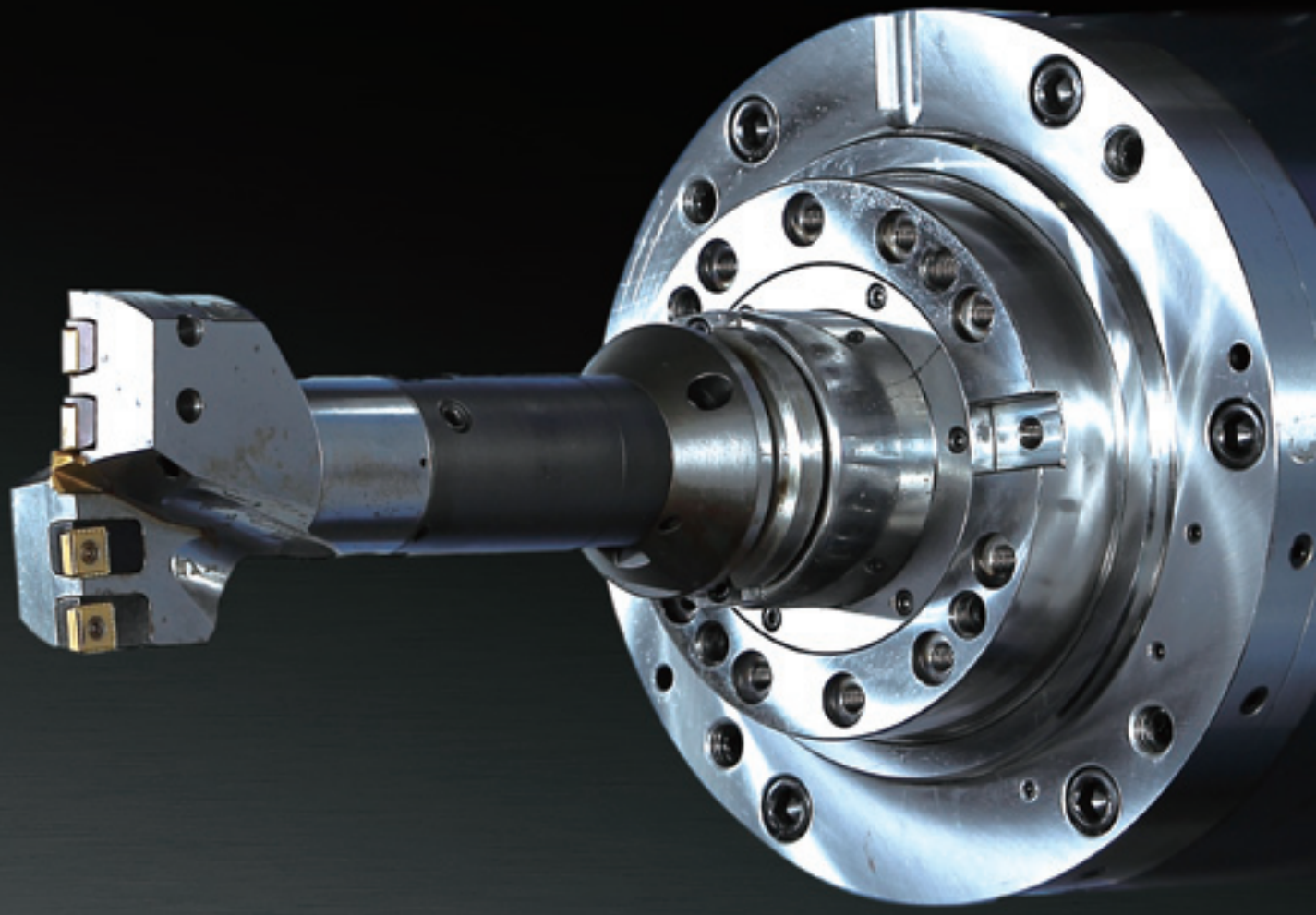

Enhanced Performance through High Rigid structure

Together with further improved high-rigidity structure and stabilized travel performance achieved through structure analysis, many options are upgraded to enhance user convenience

Optimal Solutions

Highly-Rigid Structure

For heavier workpieces and higher processing quality, the design has been improved with a cast structure offering excellent stiffness. The machine performance has been further upgraded by structural analysis of the inner rib structure.

High Accuracy

Upgraded with stable travel performance in heavy-duty machining by reducing servo load and increasing axial thrust.

High Productivity and User Convenience

Diversified options are offered to improve productivity, operating environment and operator's convenience.

Highly-Rigid Structure

For heavier workpieces and higher processing quality, the design has been improved with a cast structure offering excellent stiffness. The machine performance has been further upgraded by structural analysis of the inner rib structure.

Highly Rigid Design of Major Units

Rigidity is enhanced by optimal design of the machine structure. The highest accuracy can be achieved by minimizing deformation caused by heavy load.

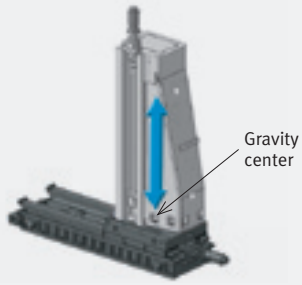

Low gravity center design to minimize vibration and column moving structure suitable for heavy load

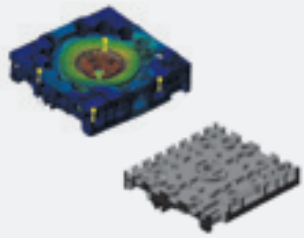

Deformation caused by heavy workpiece minimized with optimal design of table and table base

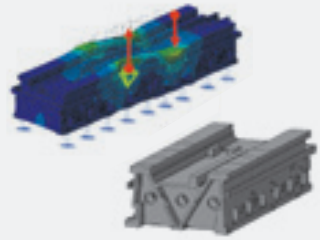

Deformation and vibration minimized by M-type ribs inside the bed.

Stable Machine Structure

A highly-rigid, stable machine structure has been realized by optimizing the design of the column and the bed. Excellent wear resistance and accuracy for machining quality have been achieved by precision grinding after heat treatment.

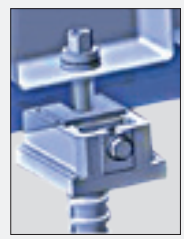

A leveling block is provided to strengthen anchoring force to the foundation, as well as enabling fast and easy installation.

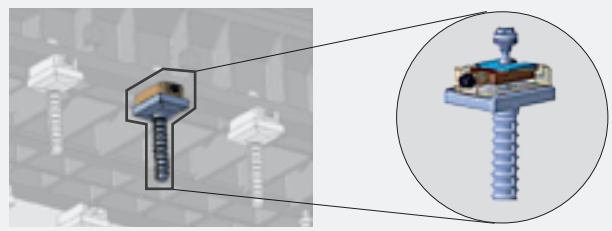

* Except DBC110S / 130S / 130SL (leveling bolt type)

Narrow Guide System

Designed with narrow guide system to minimize axis torque and ensure smooth motion.

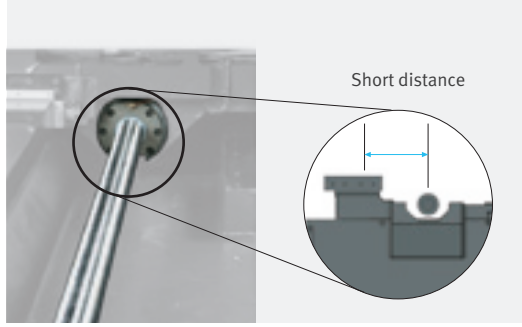

* Excluding the X axes of DBC 110S / 110 Ⅱ / 130S / 130SL

4-row Angular Ball Bearings & Ball Screw

Both ends of the shafts are supported by 4-row angular contact bearings. Low-noise, highly-precise ball screws are employed for axis travel.

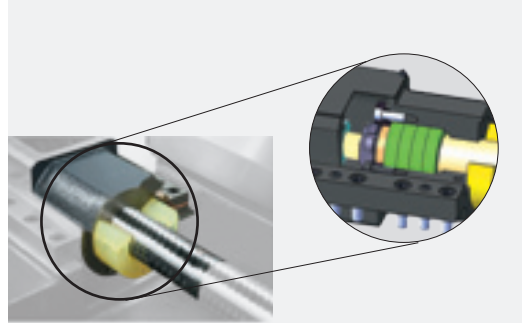

* Except DBC 110S / 130S (3-row angular contact bearings)

High Accuracy

Upgraded with stable travel performance in heavy-duty machining by reducing servo load and increasing axial thrust.

Rotary Table * Patented

A high-precision, separate type encoder is installed at the table center as a standard to realize precise rotation of the B-axis.

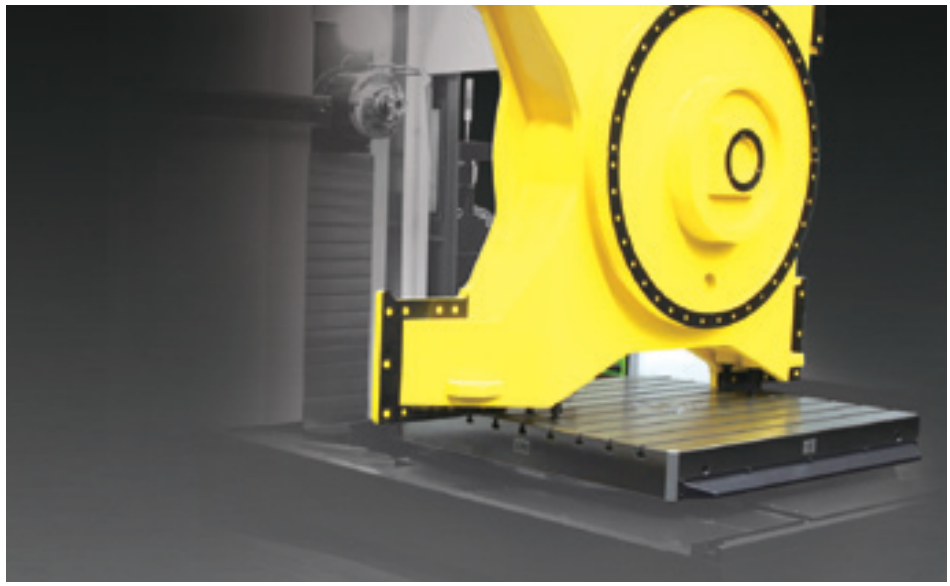

Gear reducer for axis shafts (X / Z)

- Servo load is reduced to secure stable feeding characteristics for heavy workpieces (X-axis).
- Axial thrust is increased to improve cutting capacity (Z-axis).

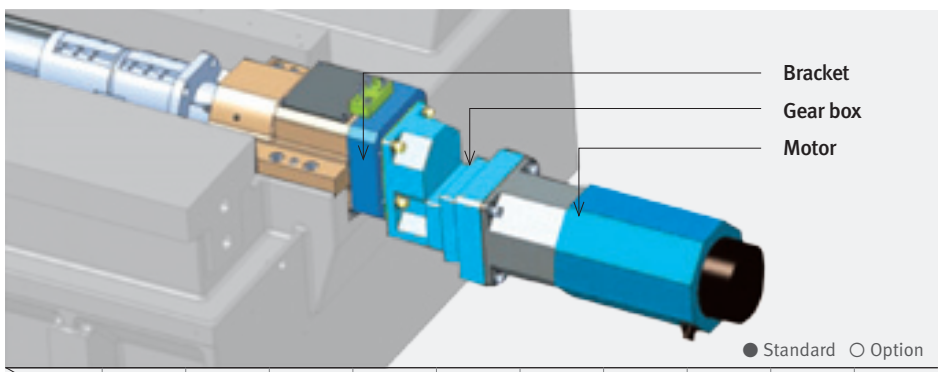

● Standard ○ Option

Axis \ Model	DBC 110S	DBC 130S	DBC 130SL	DBC 110 Ⅱ	DBC 130 Ⅱ	DBC 130L Ⅱ	DBC 160	DBC 160L	DBC 250 Ⅱ	DBC 250L Ⅱ
X-axis	○	○	○	○	○	●	●	●	○	●
Z-axis	○	○	○	○	○	●	●	●	○	●

ATC Auto Tool Changer (ATC)

The adoption of a servo-motor for tool magazine and carriage drive greatly reduces hydraulic system load of the entire machine. Machine has been improved by simplifying the structure to minimize the causes of failure.

Servo-driven Auto Tool Changer

Auto Tool Changer (ATC)

Servo tool magazine

Servo carriage

Applicable Tool Specification

	Specification	Shape
Max. tool dia.	Normal tools: D = ø130 mm (5.1 inch)	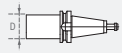
	Facing tools: D = ø250 mm (9.8 inch) (Neighboring pots must be empty)	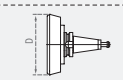
	Boring tools: D = ø400 mm (15.7 inch) D = ø600 mm (23.6 inch) option (Neighboring pots must be empty)	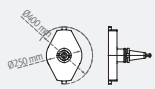

	Specification	Shape
Max. tool length	L = 600 mm (23.6 inch)	
Max. tool weight	W = 30 kg (66.1 lb)	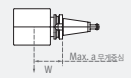
Tool storage capacity	40 {60 / 90} tools option	

Max. allowable moment: 34 N·m (25.1 ft-lbs)

* Please contact us if you wish to extend the boring tool diameter (D=ø600).

APC Automatic Pallet Changer (APC) option

While the machine tool is cutting a workpiece, the workpiece to be processed next is set up on the standby pallet which can replace the current pallet automatically at the end of cutting to raise productivity.

DBC 130 Ⅱ with APC 3D modeling layout

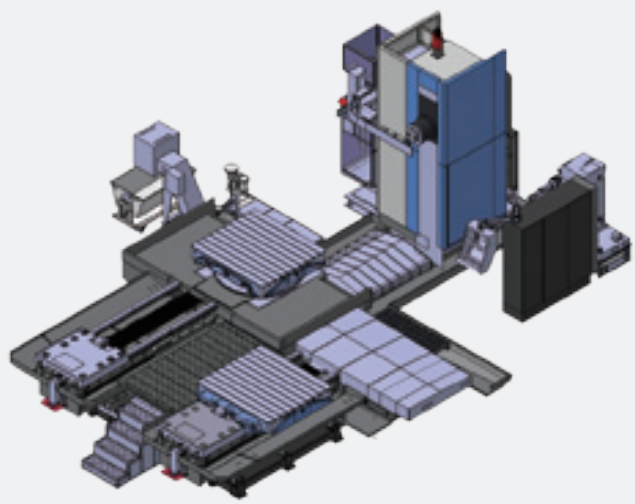

Detailed specification of APC

Details	Unit	Specification
No. of Pallets	ea	2
APC type	-	Parallel shuttle (in Z-axis direction)
Pallet size (W x L) & work load	mm (inch) & ton	• 1600 x 1800 & 10 (23.6 x 63.0 & 10) • 1800 x 2000 & 8 (70.9 x 78.7 & 8)

Note 1) The above specification is for reference to understand the APC option of DBC 130 Ⅱ.

Note 2) Please contact us for further details of the specifications. The specifications are subject to change without prior notice for performance improvement

Standard / Optional Specifications

Various options are available to satisfy the customers' requirements.

DBC S series

● Standard ○ Optional X Not applicable

NO.	Description	Features	DBC 110S	DBC 130S	DBC 130SL
1	SPINDLE MOTOR POWER	26 / 22 KW (34.9 /29.5 Hp) (30WORKPIECE SETTING DEVICE)	●	X	X
2		30 / 22 KW (40.2 /29.5 Hp) (15WORKPIECE SETTING DEVICE) (AMP UP)	○	X	X
3		45 / 37 KW (60.3 /49.6 Hp) (30WORKPIECE SETTING DEVICE)	X	X	X
4		37 / 30 KW(49.6 /40.2 Hp) (30WORKPIECE SETTING DEVICE)	X	●	●
5	ATC	40 TOOLS	○	○	○
6		60 / 90 TOOLS	○	○	○
7	WORKPIECE SETTING DEVICE	CENTER BUSH	X	X	X
8		EDGE LOCATOR	○	○	○
9	TABLE SIZE	1400 X 1600 mm(55.1X63.0 inch)	●	●	X
10		1400 X 1800 mm(55.1X70.9 inch)	X	X	●
11		1600 X 1800 mm(63.0X70.9 inch)	X	X	X
12		1800 X 2000 mm(70.9X78.7 inch)	X	X	X
13		2000 X 2200 mm(78.7X86.6 inch)	X	X	X
14		1800 X 2000 mm(70.9X78.7 inch)_20 ton	X	X	X
15		2000 X 2200 mm(78.7X86.6 inch)_19 ton	X	X	X
16		1600 X 3000 mm(63.0X118.1 inch)_20 ton	X	X	X
17	APC (1)		○	○	○
18	LINEAR SCALE (X / Y / Z)	ABSOLUTE	○	○	○
19	RAISED COLUMN (1)		○	○	○
20	SPLASH GUARD	SPLASH GUARD W/O TOP	○	○	○
21		AUTO DOOR SEMI GUARD (1) (2)	○	○	○
22	COOLANT TANK		○	○	○
23	LIFT UP CHIP CONVEYOR		○	○	○
24	Flood Coolant		○	○	○
25	TSC	1.5 KW (2.0 Hp)_2.0 MPA_BAG FILTER	○	○	○
26		1.5 KW(2.0 Hp)_2.0 MPA_CYCLON FILTER	○	○	○
27		5.5 KW(7.4 Hp)_7.0 MPA_DUAL BAG FILTER	○	○	○
28	OIL SKIMMER	BELT TYPE	○	○	○
29		DISK TYPE	○	○	○
30	COOLANT GUN		○	○	○
31	Coolant level switch : Sensing level - Low**		○	○	○
32	AIR GUN		○	○	○
33	AIR BLOWER		○	○	○
34	6-AXIS OPTION (1)	1 AXIS_WIRE AND PIPING_HYD	○	○	○
35	AUTO WORKPIECE MEASURING DEVICE	OMP60_RENISHAW	○	○	○
36		RMP60_RENISHAW	○	○	○
37	MASTER TOOL FOR AUTO TOOL MEASUREMENT	CALIBRATION BLOCK	○	○	○
38	AUTO TOOL MEASURING DEVICE	TS27R_RENISHAW	○	○	○
39	ANGULAR FIXTURE	SIZE 450 X 600 X 400	○	○	○
40		SIZE 500 X 1000 X 550	○	○	○
41		SIZE 750 X 1250 X 750	○	○	○
42		SIZE 1000 X 2000 X 1000	○	○	○
43	ATTACHMENT	90˚ ANGLE HEAD_L365	○	○	○
44		90˚ ANGLE HEAD_L660	○	○	○
45		FACE PLATE_Ø650	○	○	○
46		INDEXABLE ANGLE HEAD_90° INDEX	○	○	○
47		MANUAL UNIVERSAL HEAD_1000	○	○	○
48		SPINDLE SUPPORT_310 MM	X	○	○
49		SPINDLE SUPPORT_200 MM	○	X	X
50		COGSDILL READY	○	○	○
51	ATTACHMENT SPEED LIMIT CONTROL		○	○	○
52	ATTACHMENT SPEED LIMIT CONTROL		○	○	○
53	SPINDLE THERMAL COMPENSATION SYSTEM		○	○	○
54	TEST BAR	BT50	○	○	○
55	Y-AXIS ADDITIONAL BRAKE SYSTEM (1)		○	○	○
56	MDI / DISPLAY UNIT	15" COLOR LCD, KEYBOARD FOR DATA INPUT, SOFT-KEYS	●	●	●
57		15" COLOR LCD WITH TOUCH PANEL	X	○	○
58	GRAVITY SHAFT FALL PREVENTION SYSTEM (AT POWER FAILURE)		○	○	○
59	TRANSFORMER		○	○	○
60	POWER PANEL AIR CONDITIONER		○	○	○
61	POWER PANEL LIGHT		○	○	○
62	POWER PANEL LINE FILTER		○	○	○
63	AUTO NC POWER OFF		○	○	○
64	AUTO NC POWER ON		○	○	○
65	MACHINE WARMING UP		○	○	○
66	DOOSAN TOOL MANAGEMENT PACKAGE		○	○	○
67	DOOSAN TOOL LOAD MONITORING		○	○	○
68	MPG	1 MPG_PORTABLE_W/ENABLE TYPE	●	●	●
69		3 MPG_PORTABLE_W/ENABLE TYPE	○	○	○
70	ALARM GUIDANCE		○	○	○
71	COUNTER FUNCTION	WORK/TOTAL/DAILY	○	○	○

	NC	32iB	0iMF	31iB	0iMF	31iB
72	DSQ1 (200Block)	●	○	●	○	●
73	DSQ1 (400BLOCK)	○	○	○	○	○
74	DSQ2 (DSQ1+Data Server 1GB)	○	○	○	○	○
75	DSQ3 (DSQ2 + 600Block)	X	X	○	X	○
76	DSQ4 (DSQ3 + 1000Block)	X	X	○	X	○

* Note 1) Please contact us for further details
* Note 2) This specification applies to APC option.
* Note 3) 30 min/continuous For DBC 250(L)

** Special Quotation.

DBC II series

● Standard ○ Optional X Not applicable

NO.	Description	Features	DBC 110 II	DBC 130 II	DBC 130L II	DBC 160	DBC 160L	DBC 250 II	DBC 250L II
1	SPINDLE MOTOR POWER	26 / 22 KW(34.9 /29.5 Hp) (30min/continuous)	●	●	●	X	X	X	X
2		30 / 22 KW(34.9 /29.5 Hp) (15min/continuous) (AMP UP)	○	○	○	X	X	●(3)	●(3)
3		45 / 37 KW(34.9 /29.5 Hp) (30min/continuous)	○	○	○	●	●	X	X
4		37 / 30 KW(34.9 /29.5 Hp) (30min/continuous)	X	X	X	X	X	X	X
5	ATC	40 TOOLS	○	○	○	○	○	○	○
6		60 / 90 TOOLS	○	○	○	○	○	○	○
7	WORKPIECE SETTING DEVICE	CENTER BUSH	X	○	○	○	○	○	○
8		EDGE LOCATOR	○	○	○	○	○	○	○
9	TABLE SIZE	1400 X 1600 mm (55.1X63.0 inch)	X	X	X	X	X	X	X
10		1400 X 1800 mm (55.1X70.9 inch)	●	X	X	X	X	X	X
11		1600 X 1800 mm (63.0X70.9 inch)	X	●	●	X	X	●	●
12		1800 X 2000 mm (70.9X78.7 inch)	X	○	○	X	X	○	○
13		2000 X 2200 mm (78.7X86.6 inch)	X	○	○	X	X	○	○
14		1800 X 2000 mm (70.9X78.7 inch)_20 ton	X	X	○	X	X	X	X
15		2000 X 2200 mm (78.7X86.6 inch)_19 ton	X	X	○	X	X	X	X
16		2000 X 2200 mm (78.7X86.6 inch)_20 ton	X	X	X	●	●	X	X
17	APC(1)		○	○	○	○	○	○	○
18	LINEAR SCALE (X, Y, Z-AXIS)	ABSOLUTE	○	○	○	●	●	●	●
19	RAISED COLUMN(1)		○	○	○	○	○	○	○
20	SPLASH GUARD	SPLASH GUARD W/O TOP	○	○	○	○	○	○	○
21		AUTO DOOR SEMI GUARD(1) (2)	○	○	○	○	○	○	○
22	COOLANT TANK		○	○	○	○	○	○	○
23	LIFT-UP CHIP CONVEYOR		○	○	○	○	○	○	○
24	Flood Coolant		○	○	○	○	○	○	○
25	TSC	1.5 KW_2.0 MPA_BAG FILTER	○	○	○	○	○	○	○
26		1.5 KW_2.0 MPA_CYCLON FILTER	○	○	○	○	○	○	○
27		5.5 KW_7.0 MPA_DUAL BAG FILTER	○	○	○	○	○	○	○
28	OIL SKIMMER	BELT TYPE	○	○	○	○	○	○	○
29		DISK TYPE	○	○	○	○	○	○	○
30	COOLANT GUN		○	○	○	○	○	○	○
31	Coolant level switch : Sensing level - Low**		○	○	○	○	○	○	○
32	AIR GUN		○	○	○	○	○	○	○
33	AIR BLOWER		●	○	○	○	○	●	●
34	6-AXIS OPTION (1)	1 AXIS_WIRE AND PIPING_HYD	○	○	○	○	○	○	○
35	AUTO WORK MEASURING DEVICE	OMP60_RENISHAW	○	○	○	○	○	○	○
36		RMP60_RENISHAW	○	○	○	○	○	○	○
37	MASTER TOOL FOR AUTO TOOL MEASUREMENT	CALIBRATION BLOCK	○	○	○	○	○	○	○
38	AUTO TOOL MEASURING DEVICE	TS27R_RENISHAW	○	○	○	○	○	○	○
39	ANGULAR FIXTURE	SIZE 450 X 600 X 400	○	○	○	○	○	○	○
40		SIZE 500 X 1000 X 550	○	○	○	○	○	○	○
41		SIZE 750 X 1250 X 750	○	○	○	○	○	○	○
42		SIZE 1000 X 2000 X 1000	○	○	○	○	○	○	○
43	ATTACHMENT	90° ANGLE HEAD_L365	○	○	○	○	○	X	X
44		90° ANGLE HEAD_L660	○	○	○	○	○	X	X
45		FACE PLATE_Ø650	○	○	○	○	○	X	X
46		INDEXABLE ANGLE HEAD_90° INDEX	○	○	○	○	○	X	X
47		MANUAL UNIVERSAL HEAD_1000	○	○	○	○	○	X	X
48		SPINDLE SUPPORT_370 MM	X	X	X	○	○	X	X
49		SPINDLE SUPPORT_310 MM	X	○	○	X	X	X	X
50		SPINDLE SUPPORT_200 MM	○	X	X	X	X	X	X
51		COGSDILL READY	○	○	○	○	○	X	X
52	ATTACHMENT SPEED LIMIT CONTROL		○	○	○	○	○	X	X
53	SAFETY FENCE AND INTERLOCK SWITCH		○	○	○	○	○	○	○
54	SPINDLE THERMAL COMPENSATION SYSTEM		○	○	○	○	○	X	X
55	TEST BAR	BT50	○	○	○	○	○	○	○
56	Y-AXIS ADDITIONAL BRAKE SYSTEM (1)		○	○	○	○	○	○	○
57	MDI / DISPLAY UNIT	15" Color LCD, Keyboard for data input, soft-keys	●	●	●	●	●	●	●
58	GRAVITY SHAFT FALL PREVENTION SYSTEM (AT POWER FAILURE)		○	○	○	○	○	○	○
59	TRANSFORMER		○	○	○	○	○	○	○
60	POWER PANEL AIR CONDITIONERPOWER PANEL AIR CONDITIONER		○	○	○	○	○	○	○
61	POWER PANEL LIGHT		○	○	○	○	○	○	○
62	POWER PANEL LINE FILTER		○	○	○	○	○	○	○
63	AUTO NC POWER OFF		○	○	○	○	○	○	○
64	AUTO NC POWER ON		○	○	○	○	○	○	○
65	MACHINE WARMING UP		○	○	○	○	○	○	○
66	DOOSAN TOOL MANAGEMENT PACKAGE		○	○	○	○	○	○	○
67	DOOSAN TOOL LOAD MONITORING		○	○	○	○	○	○	○
68	MPG	1 MPG_PORTABLE_W/ENABLE TYPE	●	●	●	●	●	●	●
69		3 MPG_PORTABLE_W/ENABLE TYPE	○	○	○	○	○	○	○
70	ALARM GUIDANCE		○	○	○	○	○	○	○
71	COUNTER FUNCTION	WORK/TOTAL/DAILY	○	○	○	○	○	○	○
	NC		31iB	31iB	31iB	31iB	31iB	31iB	
72	DSQ1 (200Block)		○	○	○	○	○	○	
73	DSQ2 (DSQ1+Data Server 1GB)		○	○	○	○	○	○	
74	DSQ3 (DSQ2 + 600Block)		○	○	○	○	○	○	
75	DSQ4 (DSQ3 + 1000Block)		○	○	○	○	○	○	

Chip Disposal System

Proper chip disposal is very important for productivity and environment protection. The DBC series provides various chip disposal systems designed to improve productivity and the working environment.

Easy Chip Removal Structure

The DBC series confines chips and coolant to the chip pan to make the chip disposal using the chip conveyer easier.

Coolant gun option

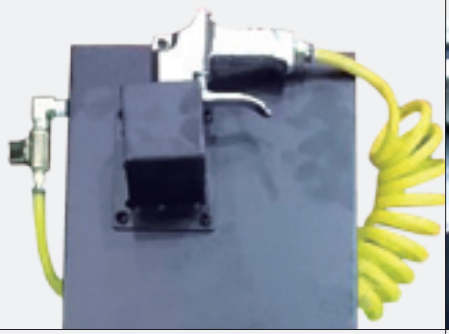

Chip pan

Slope-type chip pan is used for smooth coolant drain and chip disposal

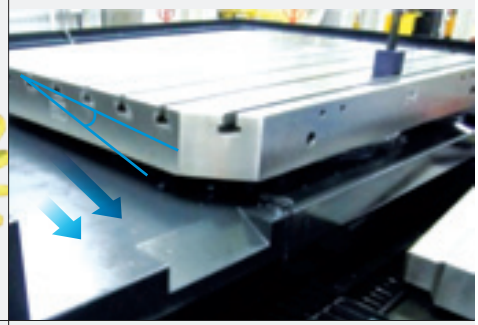

Built-in, hinge-type belt chip conveyor

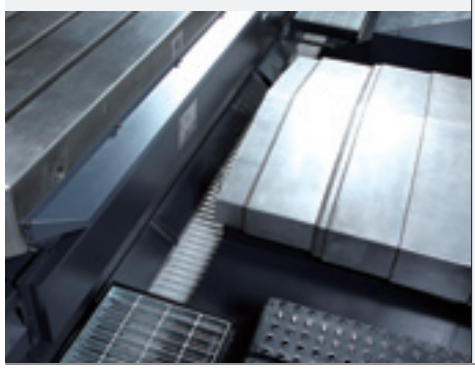

Lift-up chip conveyor option

Coolant Splash Guard option

Semi-splash guard

DBC 110S / 130S / 130SL

DBC 110 Ⅱ

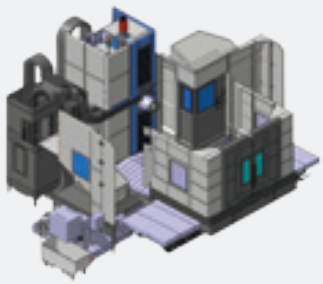

DBC 130 / 130L / 160 / 250 Ⅱ / 250L Ⅱ

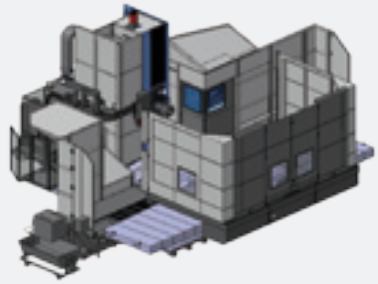

Auto door semi-splash guard (for APC option)

DBC 130 Ⅱ / L Ⅱ
DBC 250 Ⅱ / L Ⅱ

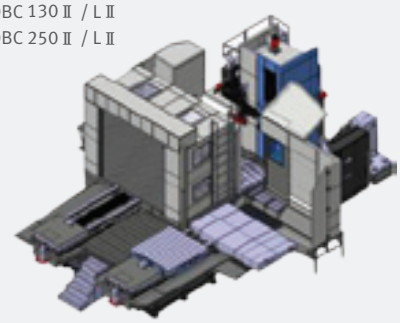

DBC 160

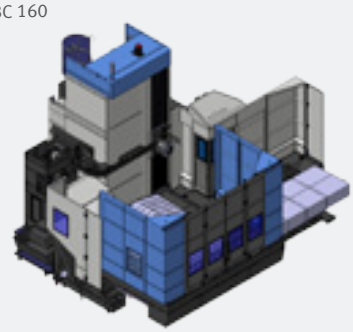

Full -splash guard

DBC 130 Ⅱ

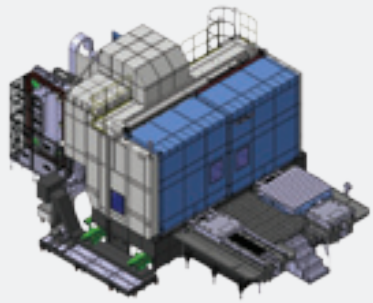

Special Options option

Special option can be available. please ask to sales person for detail.

1. Angle head (manual indexing)
(L=365mm(14.4 inch), 500r/min)
(L=420mm(16.5 inch), 1500r/min)[1)]

2. Long type angle head
(L=660mm(26.0 inch), 500r/min)
(L=650mm(25.6 inch), 1500r/min)[1)]

3. Universal head (manual indexing)

4. Face plate (manual indexing)
(Ø650mm (25.6 inch))

5. Indexable angle head (90° auto indexing)
Please contact us for further details of specification.

6. Spindle support [2)]

- DBC 110S / 110 Ⅱ : L = 200mm (7.9 inch)
- DBC 130S / SL : L = 310mm (12.2 inch)
- DBC 130 / L : L= 310mm (12.2 inch)
- DBC 160 / L : L=370mm (14.6 inch)

7. Facing head (Cogsdill)
- with U-axis preparation
- manual tool change
- manual installation

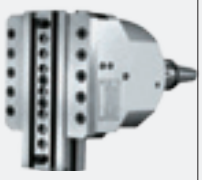

8. Facing head TA-Center (D'Andrea)
- with U-axis preparation
- ATC change

9. Facing head U-Tronic (D'Andrea)
- with U-axis preparation
- manual tool change
- manual installation

10. Extension tool head
High rigidity for heavy cutting, protect spindle when taper got damage

11. AAC (Auto Attachment Change)
Auto attachment change for facing head

12. Angle plate (4 types)
- Please contact us for customized specifications.
- Please contact us for further information.

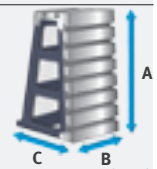

Unit : mm (inch)

A	450 (17.7)	500 (19.7)	750 (29.5)	1000 (39.4)
B	600 (23.6)	1000 (39.4)	1250 (49.2)	2000 (78.7)
C	400 (15.7)	550 (21.7)	750 (29.5)	1000 (39.4)

1) Further discussion need when use high speed angle head. 2) Additional discussion is required when ATC need while spindle support is attached.
(Note) The head attachments (1 ~ 11) are not applicable for DBC 250 (L) Ⅱ model.

Easy and Convenient Operation

Operating system for enhanced user convenience

DOOSAN's new operation panel

With differentiated hotkey, the DBC Series enables fast access to frequently used functions

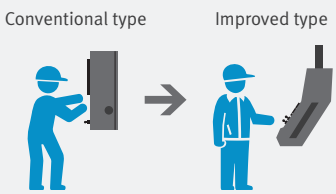

Improved user convenience with ergonomic design

The tilting operation panel ensures enhanced operating convenience.

Productivity improved by adoption of operator panel design optimized for the operation of large machines

- Mono lever jog switches are provided at the bottom of the main operation panel for easy traverse on the long axis of large machines (standard).
- Pulse handle for the operator's convenience and portable MPG for easy workpiece setting are provided as standard features.

Portable MPG

ATC OP panel

3 Portable MPG
option

MPG with LCD display
option

Mono lever jog switch

Easy Operation Package

Tool Load Monitoring

- Automatically detects tool wear and tear in the case of abnormal workloads using M-code.
- Workpiece-specific machining data can be saved.

Periodic Inspection Function

This function updates the operator with maintenance-related information such as oil refill timing.

Automatic Backlash Compensation

After setting up the workpiece, feed backlash is automatically detected and compensated by the G-code instruction or though the function screen.

Tool Life Management

Tools are protected from abnormal load on the servo shaft, by skipping the tool or generating a freehold alarm.

Easy Pattern Cycle

Major processing pattern cycles and programs can be created by simply entering major factors. This function is built in the CNC, thus drastically reducing programming time and enabling easy use on site. A total of 22 patterns including basic 5 patterns are provided.

Drilling pattern

End-mill pattern

Variable Work Load Control®

When the operator enters the M-code for the weight of the workpiece, the system automatically determines the table feed pattern to perform cutting.

● Standard ○ Option

Work Load Control	DBC 110S	DBC 130S / SL	DBC 110 II	DBC 130 II	DBC 130L II	DBC 160	DBC 160L	DBC250 / L II
5tons or less	●	●	●	●	●	●	●	●
10tons or less	●	●	●	●	●	●	●	●
15tons or less				●	●	●	●	●
20tons or less					○	●	●	

Selection Function

Support Function for Maintenance - Easy Operation Guidance option

Machine faults including problems with the ATC magazine are detected and troubleshooting suggestions are proposed for corrective action. For guidance on easy operation, display windows - including function selection, thermal error setting, program progress display, and operation report display - are provided.

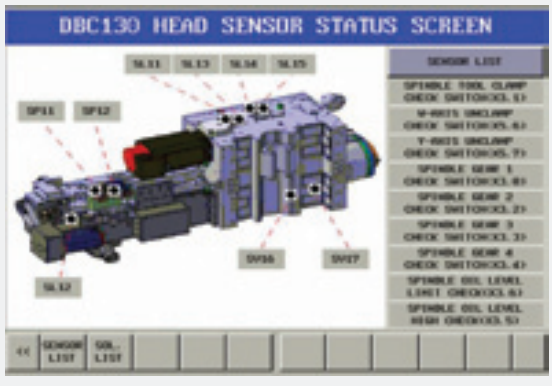

SIEMENS 840D

SIEMENS CNC optimized for DOOSAN machine tools maximizes users' productivity.

15.6 inch screen + New OP

The newly-designed operation panel enhances operating convenience by incorporating common-design buttons and layout, and features the Qwerty keyboard for fast and easy operation.

15.6-inch display

- 10MB high capacity user memory
- USB & Ethernet (standard)
- QWERTY Keyboard (standard)
- High speed calculation and simulation can be fulfilled by improved processor skill

Conversational Convenient function

The machining monitoring function developed on the basis of the Shop Mill – an interactive machining support function of SIEMENS – provides users with cutting, servicing and maintenance screens for easy and convenient machine operation.

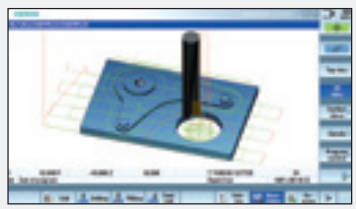

Simulation and machining contour monitoring
Simulation results with different views can be checked.

Smart function
Color highlighting is provided for each processing code function, and the calculator can be used easily by using the pocket calculator on display.

Shop Mill Part Programming
It helps to write the part program and shorten the writing time.

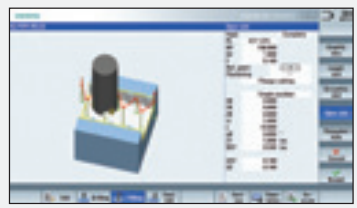

Advanced program language programGUIDE
Increases program flexibility, minimizing cycle time.

Mold processing view
big size mold program can be quickly summarized and display machining process and results.

Side screen widget
Through the side widget, operator can easily monitor the current machining status.

External Dimensions

DBC 110S

Unit: mm(inch)

Top View

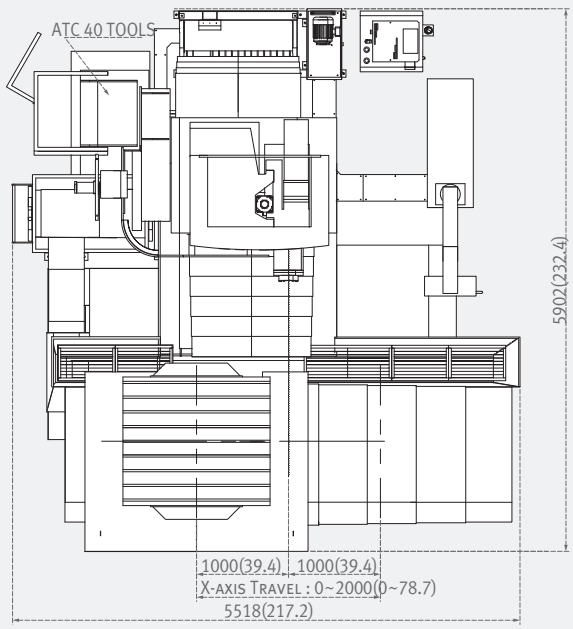

Front View

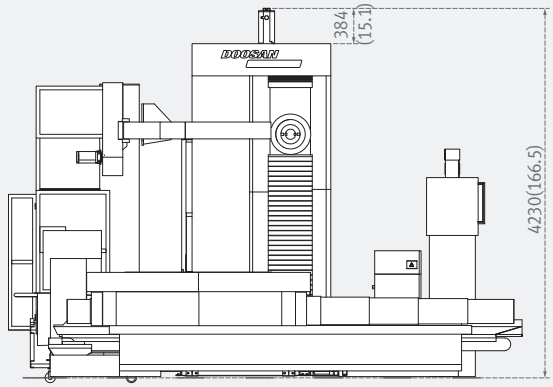

Side View

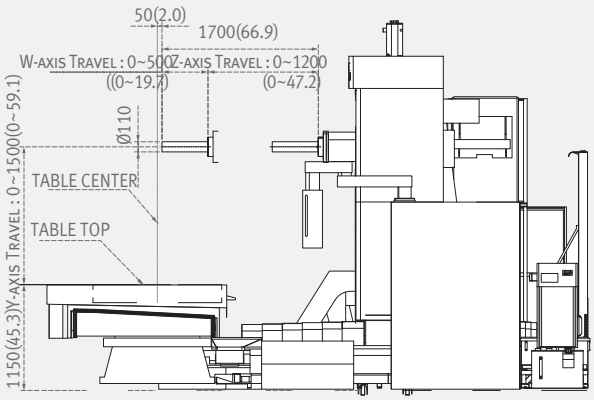

Table

1400 x 1600 (55.1 x 63.0)

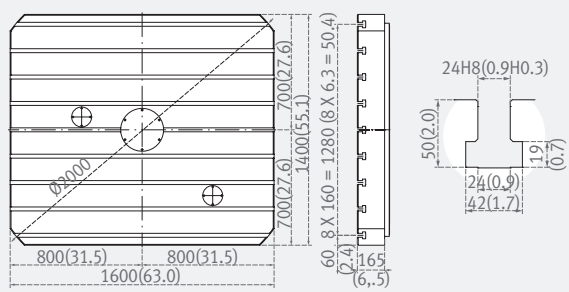

* Some peripheral equipment can be placed in other places

** Providing anchoring bolts. Foundation work must be done.

External Dimensions

DBC 130S

Unit: mm(inch)

Top View

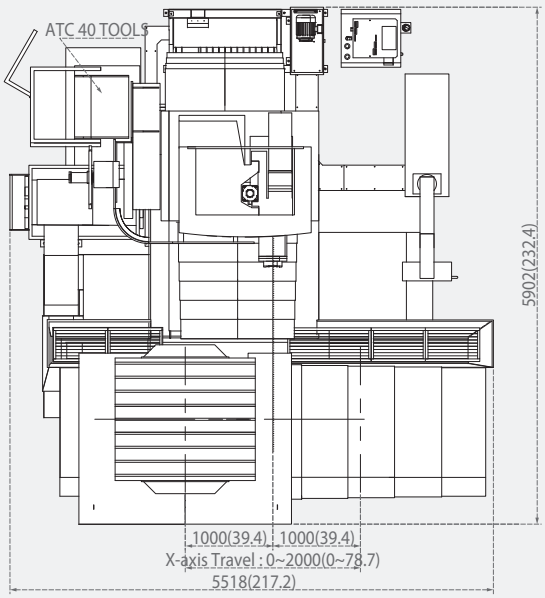

Front View

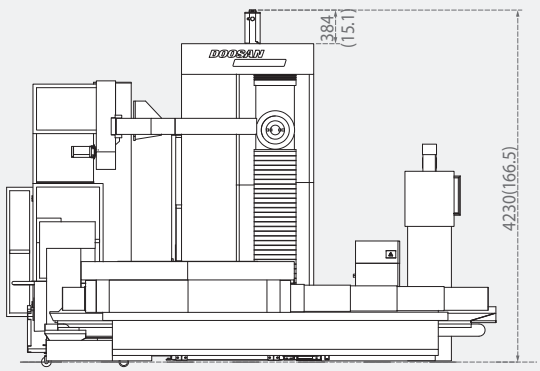

Side View

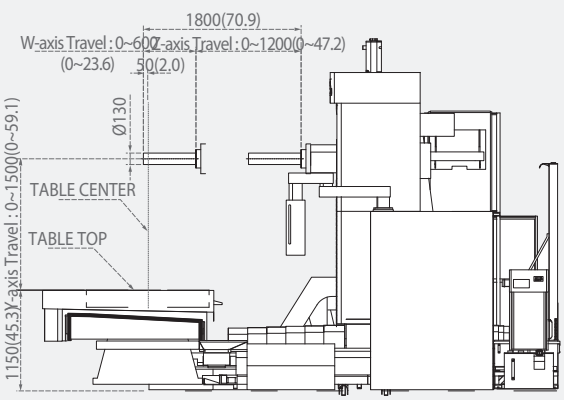

Table

1400 x 1600 (55.1 x 63.0)

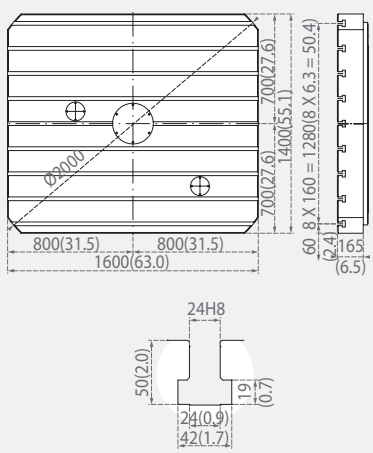

* Some peripheral equipment can be placed in other places

** Providing anchoring bolts. Foundation work must be done.

DBC 130 SL

Unit: mm(inch)

Top View

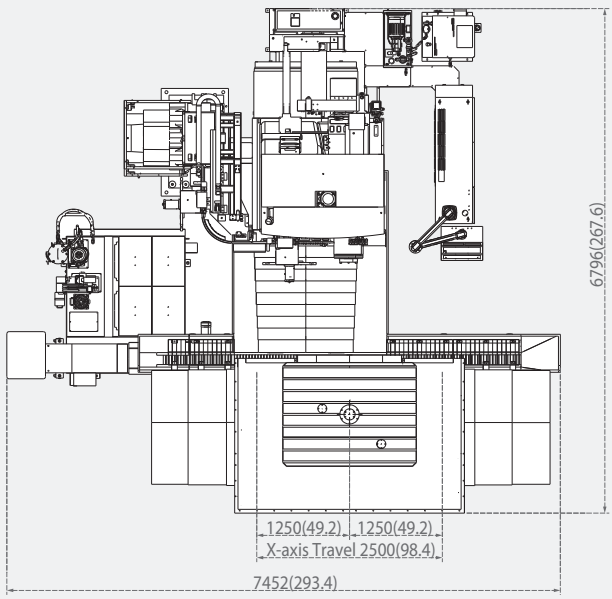

Front View

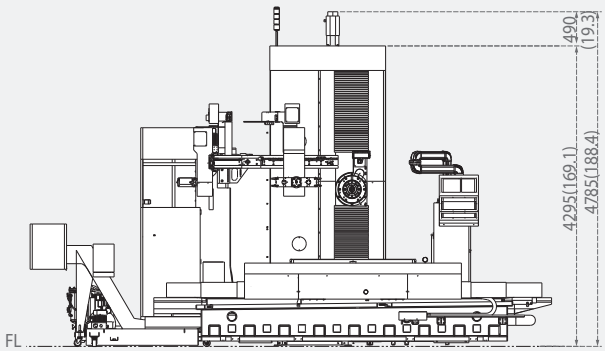

Side View

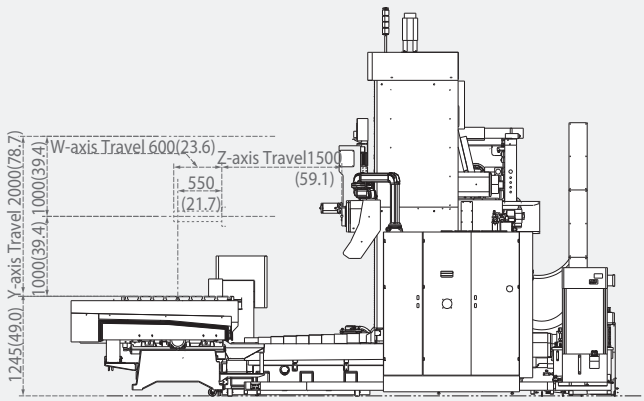

Table

1400 x 1800 (55.1 x 70.9)

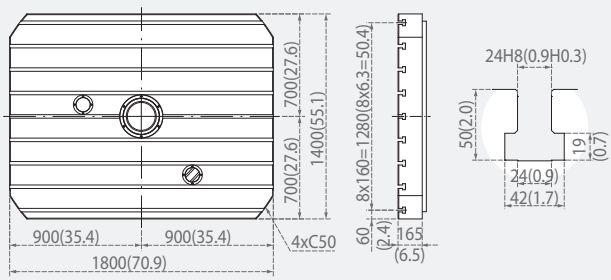

* Some peripheral equipment can be placed in other places

** Providing anchoring bolts. Foundation work must be done.

External Dimensions

DBC 110 Ⅱ

Unit: mm(inch)

Top View

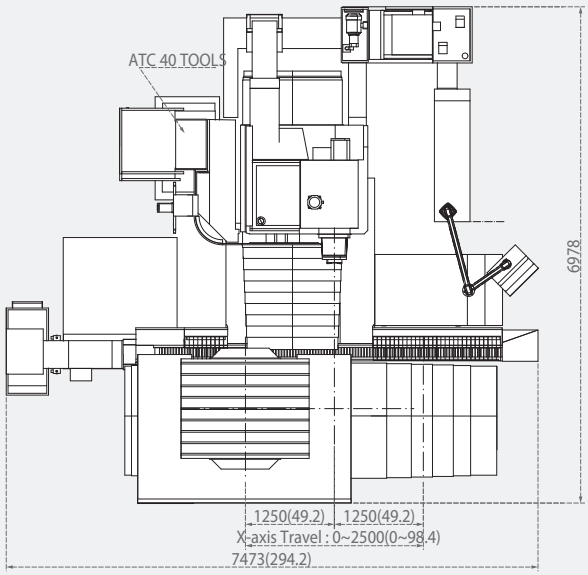

Front View

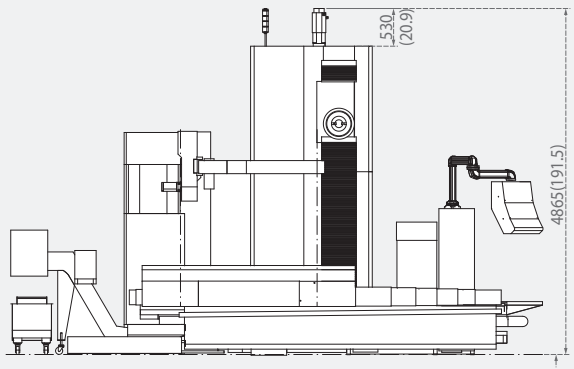

Side View

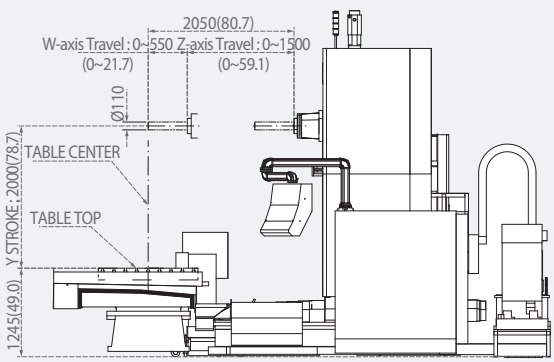

Table

1400 x 1600 (55.1 x 63.0)

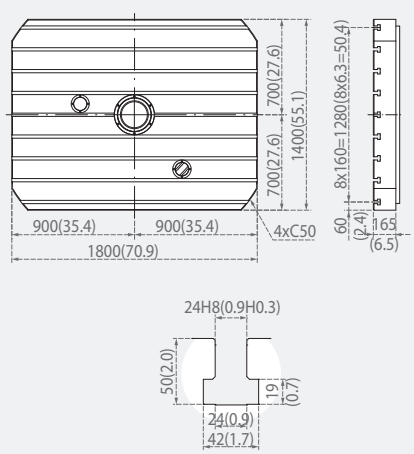

* Some peripheral equipment can be placed in other places

** Providing anchoring bolts. Foundation work must be done.

DBC 130 Ⅱ / 130L Ⅱ / 250 Ⅱ / 250L Ⅱ

Unit: mm(inch)

Top View

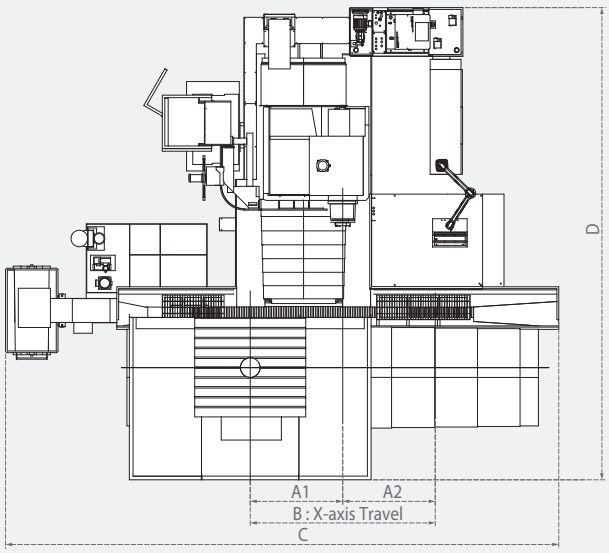

Front View

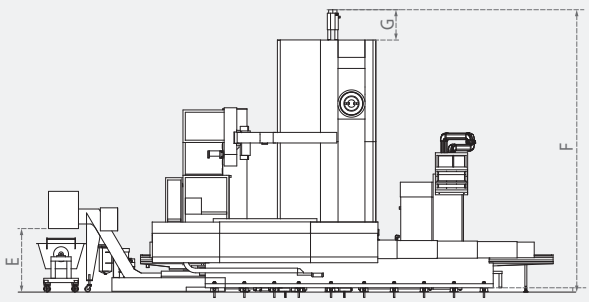

Side View (**DBC 130Ⅱ / 130L Ⅱ**)

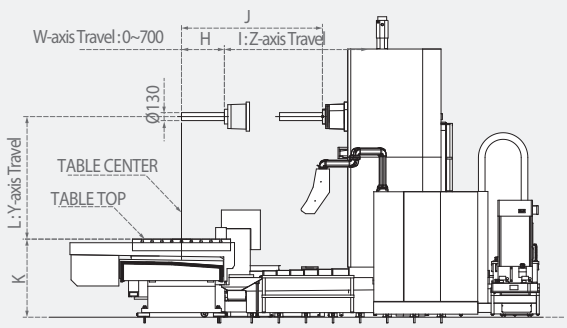

Side View (**DBC 250Ⅱ / 250L Ⅱ**)

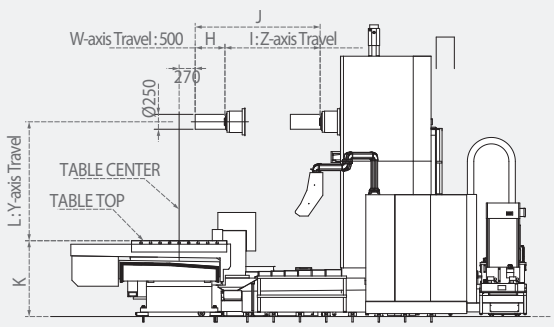

기종명	A1 / A2	B	C	D	E	F	G	H	I	J	K	L
DBC 130 Ⅱ	1500 (59.1)	0-3000 (0-118.1)	8970 (353.1)	7660 (301.6)	1103 (43.4)	4905 (193.1)	527 (20.7)	0-700 (0-27.6)	0-1600 (0-63.0)	2300 (90.6)	1275 (50.2)	0-2000 (0-78.7)
DBC 130L Ⅱ	2000 (78.7)	0-4000 (0-157.5)	9970 (392.5)	8085 (318.3)	1103 (43.4)	5406 (212.8)	527 (20.7)	0-700 (0-27.6)	0-2000 (0-78.7)	2700 (106.3)	1275 (50.2)	0-2500 (0-98.4)
DBC 250 Ⅱ	1500 (59.1)	0-3000 (0-118.1)	8970 (353.1)	7660 (301.6)	1103 (43.4)	4905 (193.1)	527 (20.7)	0-500 (0-19.7)	0-1600 (0-63.0)	2100 (82.7)	1275 (50.2)	0-2000 (0-78.7)
DBC 250L Ⅱ	2000 (78.7)	0-4000 (0-157.5)	9970 (392.5)	8085 (318.3)	1103 (43.4)	5406 (212.8)	527 (20.7)	0-500 (0-19.7)	0-2000 (0-78.7)	2500 (98.4)	1275 (50.2)	0-2500 (0-98.4)

* Some peripheral equipment can be placed in other places

** Providing anchoring bolts. Foundation work must be done.

External Dimensions

DBC 160

Unit: mm(inch)

Top View

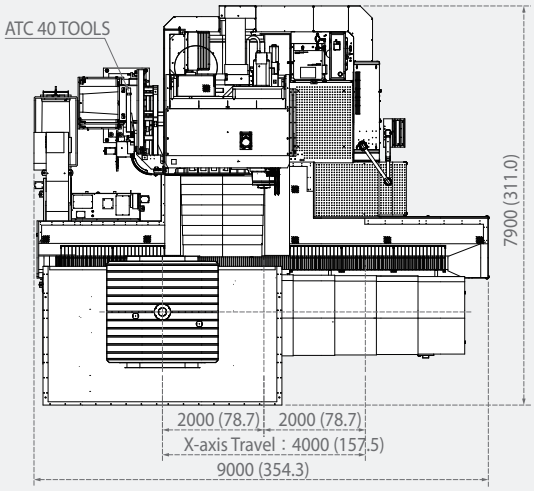

Front View

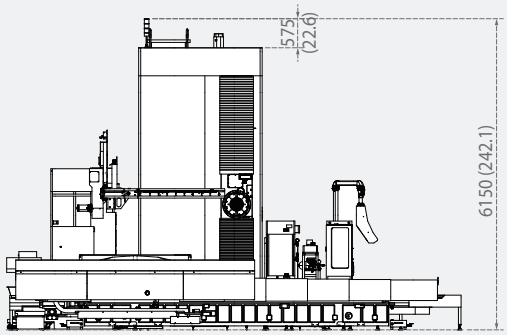

Side View

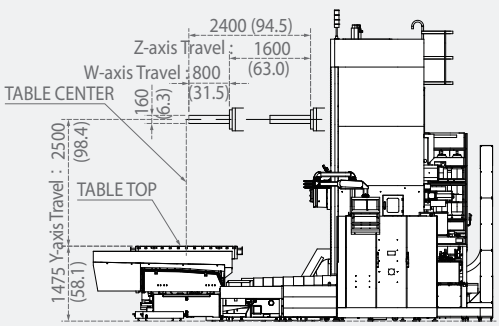

Table 2000 x 2200

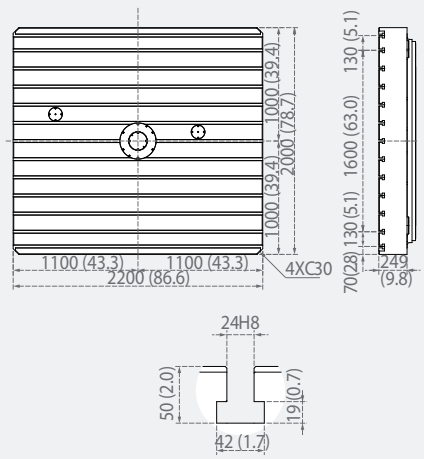

기종명	A1 / A2	B	C	D	E	F	G	H	I	J	K	L
DBC 160	2000 (78.7)	0-4000 (0-157.5)	8958 (352.7)	7872 (309.9)	1103 (43.4)	6150 (242.1)	575 (22.6)	0-800 (0-31.5)	0-1600 (0-63.0)	2400 (94.5)	1475 (58.1)	2500 (98.4)

* Some peripheral equipment can be placed in other places

** Providing anchoring bolts. Foundation work must be done.

DBC 130 Ⅱ with APC option

Unit: mm(inch)

Top View

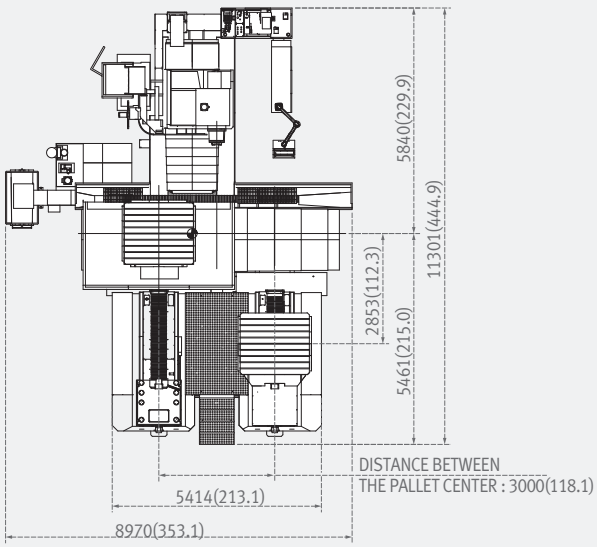

Front View

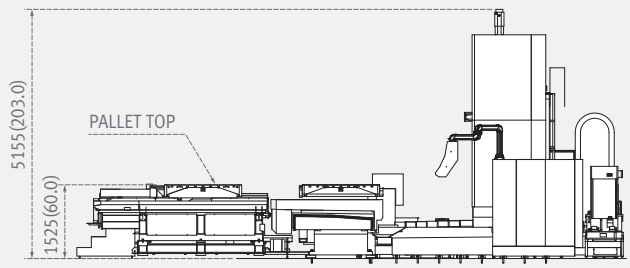

* Please contact us for further details of the specifications. The specifications are subject to change without prior notice for performance improvement.

* Some peripheral equipment can be placed in other places

** Providing anchoring bolts. Foundation work must be done.

APC Pallet

1600 x 1800 (63.0 x 70.9) option 1
APC loading capacity : 10 tons

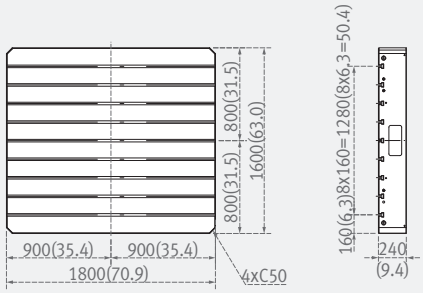

1800 x 2000 (70.9 x 78.7) option 2
APC loading capacity : 8 tons

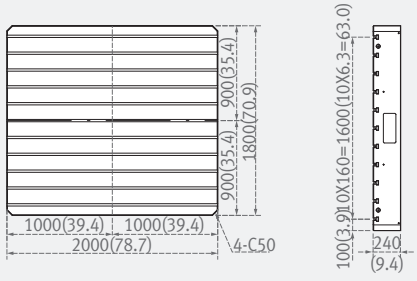

T-Slot

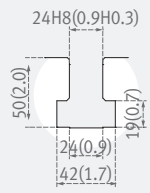

Table

1600 x 1800(63.0 x 70.9)

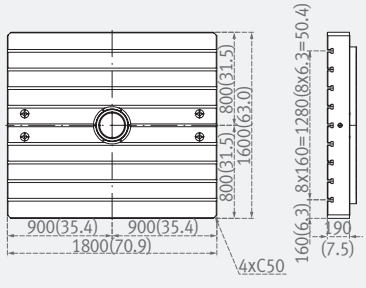

1800 x 2000 [2000 x 2200]
(70.9 x 78.7 [78.7 x 86.6]) option

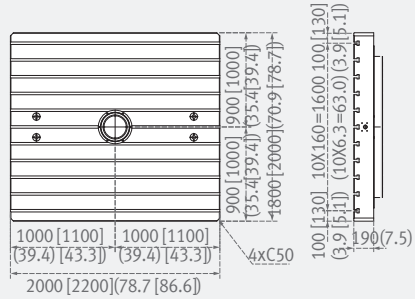

Machine Specifications

Description			Unit	DBC 110S	DBC 130S	DBC 130SL
Travels	Travel distance	X-axis	mm (inch)	2000 (78.7)		2500 (98.4)
		Y-axis	mm (inch)	1500 (59.1)		2000 (78.7)
		Z-axis	mm (inch)	1200 (47.2)		1500 (59.1)
		W-axis	mm (inch)	500 (19.7)	600 (23.6)	
	Distance from spindle nose to table top		mm (inch)	0 ~ 1500 (0~59.1)		0~2000 (0~78.7)
	Distance from spindle nose to table center		mm (inch)	550 ~ 1750 (21.7~2.9)		
Feedrate	Rapid traverse	X, Y, Zaxes	m/min	12		
		W-axis	m/min	6		
	Cutting feedrate	X, Y, Zaxes	mm/min	1 ~ 6000		
Table	Table size		mm (inch)	1400 x 1600 (55.1x63.0)		1400 x 1800 (55.1x70.9)
	Swing diameter	Without semi-S/G	mm (inch)	ø2550 (100.4)		ø3400 (133.9)
		With semi-S/G	mm (inch)	ø2100 (82.7)		ø2250 (88.6)
	Load capacity	1400 x 1600 mm	kg (lb)	7000 (15432.1)	8000 {10000} (17636.7 {22045.9})	-
		1400 x 1800 mm	kg (lb)	-	-	10000 (22045.9)
		1600 x 3000 mm	kg (lb)	-	-	-
		1600 x 1800 mm	kg (lb)	-	-	-
		1800 x 2000 mm	kg (lb)	-	-	-
		2000 x 2200 mm	kg (lb)	-	-	-
Spindle	Max. spindle speed		r/min	3000	2500	
	Boring spindle diameter		mm (inch)	110 (4.3)	130 (5.1)	
	Quill diameter		mm (inch)	-	-	-
Motor	Spindle motor (30 min/cont.) {AMP UP: 15 min/cont.}		kW (Hp)	26/22 (34.9/29.5) {30/22 (40.2/29.5)}*	37/30 (49.6/40.2)	
ATC option	Tool storage capacity		ea	40 / 60 / 90		
	Tool shank			MAS403 BT50		
	Max. tool diameter		mm (inch)	ø130 / 250 / 400 / 600(1) (5.1 / 9.8 / 15.7 / 23.6)		
	Max. tool length		mm (inch)	600 (23.6)		
	Max. tool weight		kg (lb)	30 (66.1)		
	Max. tool moment		N·m (ft-lbs)	34.3 (25.3)		
	Method of tool selection			Fixed address		
Power source	Electric power supply (rated capacity)		kVA	70		
Machine dimensions	Height		mm (inch)	4230 (166.5)		4860 (191.3)
	Length x Width		mm (inch)	5520 x 5900 (217.3 x 232.3)		7450 x 6800 (293.3 x 267.7)
	Weight		kg (lb)	29000 (63933.1)	30000 (66137.7)	36000 (79365.2)
CNC system				Fanuc 32i	DOOSAN Fanuc i Plus	

* { } : Option

(1) For Ø250 and Ø400 mm tools, neighboring pots must be empty. For Ø600 mm tools, neighboring two pots must be empty.

Description			Unit	DBC 110 Ⅱ	DBC 130 Ⅱ	DBC 130L Ⅱ	DBC 160	DBC 160L	DBC 250 Ⅱ	DBC 250L Ⅱ
Travels	Travel distance	X-axis	mm (inch)	2500 (98.4)	3000 (118.1)	4000 (157.5)	4000 (157.5)	5000* (196.9)	3000 (118.1)	4000 (157.5)
		Y-axis	mm (inch)	2000 (78.7)		2500 (98.4)	2500 (98.4)	3000* (118.1)	2000 (78.7)	2500 (98.4)
		Z-axis	mm (inch)	1500 (59.1)	1600 (63.0)	2000 (78.7)	1600 (63.0)	2000 (78.7)	1600 (63.0)	2000 (78.7)
		W-axis	mm (inch)	550 (21.7)	700 (27.6)		800 (31.5)	800 (31.5)	500 (19.7)	500 (19.7)
	Distance from spindle nose to table top		mm (inch)	0 ~ 2000 (0~78.7)		0 ~ 2500 (0~98.4)	0 ~ 2500 (0~98.4)	0 ~ 3000 (0~118.1)	0 ~ 2000 (0~78.7)	0 ~ 2500 (0~98.4)
	Distance from spindle nose to table center		mm (inch)	550 ~ 1750 (21.7 ~ 68.9)	700 ~ 2300 (27.6 ~ 90.6)	700 ~ 2700 (27.6 ~ 106.3)	850 ~ 2450 (33.5 ~ 96.5)	850 ~ 2850 (33.5 ~ 112.2)	770 ~ 2370 (30.3 ~ 93.3)	770 ~2770 (30.3 ~ 109.1)
Feedrate	Rapid traverse	X, Y, Zaxes	m/min	12	10	10 / 8 / 10 {7 / 8 / 10}*	10 / 10 / 10	7.5 / 10 / 10	10	10 / 8 / 10
		W-axis	m/min	6(0.2)					10	
	Cutting feedrate	X, Y, Zaxes	mm/min	1 ~ 6000	1 ~ 4000					
Table	Table size		mm (inch)	1400 x 1800 (55.1 x 70.9)	1600 x 1800 (63.0 x 70.9) {1800 x 2000 (70.9 x 78.7), 2000 x 2200 (78.7 x 86.6)}*		2000 x 2200 (78.7 x 86.6)	2000 x 2200 (78.7 x 86.6)	1600 x 1800 (63.0 x 70.9) {1800 x 2000 (70.9 x 78.7), 2000 x 2200 (78.7 x 86.6)}*	
	Swing diameter	Without semi-S/G	mm (inch)	ø3400 (133.9)	ø3900 (153.5)	ø4800 (189.0)	ø4800 (189.0)	ø4800 (189.0)	ø3900 (153.5)	ø4800 (189.0)
		With semi-S/G	mm (inch)	ø2250 (88.6)	ø3400 (133.9)	ø3400 (133.9)	ø3400 (133.9)	ø3400 (133.9)	ø3400 (133.9)	ø3400 (133.9)
	Load capacity	1400 x 1600 mm	kg (lb)	-	-	-	-	-	-	-
		1400 x 1800 mm	kg (lb)	10000 (22045.9)	-	-	-	-	-	-
		1600 x 1800 mm	kg (lb)	-	15000 (3306.9)			-	15000 (3306.9)	
		1800 x 2000 mm	kg (lb)	-	{13000 (28659.7)}*	{13000 (28659.7), 20000 (44091.8)}*		-	{13000 (28659.7)}*	
		2000 x 2200 mm	kg (lb)	-	{12000 (26455.1)}*	{12000 (26455.1), 19000}*	2000 (4409.2)	-	{12000 (26455.1)}*	
Spindle	Max. spindle speed		r/min	4000	3000		2000	2000	6000	
	Boring spindle diameter		mm (inch)	110 (4.3)	130 (5.1)		160 (6.3)	160 (6.3)	-	-
	Quill diameter		mm (inch)	-			-	-	250 (9.8)	
Motor	Spindle motor (30 min/cont.) {AMP UP: 15 min/cont.}		kW (Hp)	26/22 {30/22}*, {45/37}* (34.9/29.5 {40.2/29.5}, {60.3/49.6})			45/37 (60.3/49.6)		30/22 (40.2/29.5)	
ATC option	Tool storage capacity		ea	40 / 60 / 90						
	Tool shank			MAS403 BT50						
	Max. tool diameter		mm	ø130 / 250 / 400 / 600(1) (5.1 / 9.8 / 15.7 / 23.6)						
	Max. tool length		mm (inch)	600 (23.6)						
	Max. tool weight		kg (lb)	30 (66.1)						
	Max. tool moment		N·m (ft-lbs)	34.3 (25.3)			41.1 (30.3)	40.8 (30.1)	34.3 (25.3)	
	Method of tool selection			Fixed address						
Power source	Electric power supply (rated capacity)		kVA	70 {90 kVA with 45kW motor}*			90		70	
Machine dimensions	Height		mm (inch)	4870 (191.7)	4910 (193.3)	5410 (213.0)	6150 (242.1)	6650 (261.8)	4910 (193.3)	5410 (213.0)
	Length x Width		mm (inch)	7470 x 6980 (294.1x274.8)	8970 x 7660 (353.1x301.6)	9970 x 8090 (392.5x318.5)	9000 x 7900 (354.3x311.0)	10000x8300 (393.7 x 326.8)	8970 x 7640 (353.1 x 300.8)	9970 x 8090 (392.5 x 318.5)
	Weight		kg (lb)	36000 (79365.2)	43000 (94797.4)	48000 {50000}* (105820.3 {110229.5})	49000 (108024.9)	51000 (112434.1)	43000 (94797.4)	48000 (105802.3)
CNC system				Fanuc 31i {Heidenhain, Siemens}						

* { } : Option

(1) For Ø250 and Ø400 mm tools, neighboring pots must be empty. For Ø600 mm tools, neighboring two pots must be empty.

NC Unit Specifications

Fanu 31i

Control Axes

Controlled axes	5 (X, Y, Z, W, B)
Simultaneously controllable axes	Positioning(G00)/Linear interpolation(G01) : 3 axes Circular interpolation(G02, G03) : 2 axes
Backlash compensation	
Emergency stop / overtravel	
Follow up	
Least command increment	0.001mm / 0.0001(inch)
Least input increment	0.001mm / 0.0001(inch)
Machine lock	all axes / Z axis
Mirror image	Reverse axis movement (setting screen and M - function)
Stored pitch error compensation	Pitch error offset compensation for each axis
Stored stroke check 1	Overtravel controlled by software

Interpolation & Feed Function

2nd reference point return	G30
AI Contour Control II	200 block preview
Automatic corner deceleration	
Circular interpolation	G02, G03
Control axis detach	
Dual position feedback	
Dwell	G04
Exact stop check	G09, G61(mode)
Feed per minute	mm / min
Feedrate clamp by circular radius	
Feedrate override (10% increments)	0 - 200 %
Helical interpolation	
Jog feedrate	0~ 5000 mm/min
Linear ACC/DEC after interpolation	
Linear ACC/DEC before interpolation	
Linear interpolation	G01
Manual handle feed(1 unit)	
Manual handle feedrate	0.1 / 0.01 / 0.001mm
Override cancel	M48 / M49
Positioning	G00
Program restart	
Rapid traverse bell-shaped acceleration /deceleration	
Rapid traverse override	F0 (fine feed), 25 / 50 / 100 %
Reference point return	G27, G28, G29
Skip function	G31
Smooth backlash compensation	
Thread cutting, synchronous cutting	

Spindle & M-code Function

M - code function	M 3 digits
Polar coordinate interpolation	G12.1 / G13.1
Retraction for rigid tapping	
Rigid tapping	G84, G74
Scaling	G50, G51
Spindle orientation	
Spindle output switching	
Spindle serial output	
Spindle speed command	S5 digits
Spindle speed override (10% increments)	10 - 150 %

TOOL FUNCTION

Cutter compensation C	G40, G41, G42
Tool length compensation	G43, G44, G49
Tool life management	Geometry / Wear and Length / Radius offset memory
Tool number command	T3 digits
Tool offset memory C	
Number of tool offsets	200 ea

Programming & Editing Function

Absolute / Incremental programming	G90 / G91
Addition of custom macro common variables	
Additional work coordinate system(48 Pair)	G54.1 P1 - 48 pairs
Auto. Coordinate system setting	
Background editing	
Canned cycle	G73, G74, G76, G80 - G89, G99
Circular interpolation by radius programming	
Coordinate system rotation	G68, G69
Custom macro B	
Custom size 512kb	
Decimal point input	
Extended part program editing	
I / O interface	USB / RS-232C
Inch / metric conversion	G20 / G21
Label skip	
Local / Machine coordinate system	G52 / G53
Macro executor	
Maximum commandable value	±99999.999mm (±9999.9999 inch)
No. of Registered programs	500 ea
Optional angle chamfering / corner R	
Optional block skip	
Optional stop	M01
Part program storage	256kb(640 m)
Program number	O4-digits
Program protect	
Program stop / end	M00 / M02, M30
Programmable data input	Tool offset and work offset are entered by G10, G11
Sub program	Up to 4 nesting
Tape code	ISO / EIA Automatic discrimination
Work coordinate system	G54 - G59

OTHERS FUNCTIONS (Operation, Setting & Display, etc)

Alarm display	
Alarm history display	
Clock function	
Cycle start / Feed hold	
Display of PMC alarm message	Message display when PMC alarm occurred
Dry run	
Ethernet function (Embedded)	
External data input	
Graphic display	Tool path drawing
Help function	
MDI / DISPLAY unit	15" color LCD, Keyboard for data input, soft-keys
Memory card interface	
Multi language display	
Operation functions	Tape / Memory / MDI / Manual
Operation history display	
Program restart	
Run hour and part number display	
Search function	Sequence NO. / Program NO.
Self - diagnostic function	
Servo setting screen	
Single block	
CNC screen display	
CNC screen dual display function	

Optional Functions

3-dimensional coordinate conversion	
3-dimensional tool compensation	
3rd / 4th reference return	
Addition of tool pairs for tool life management	1024 pairs
Additional controlled axes	max. 6 axes in total
Additional work coordinate system	G54.1 P1 - 300 (300 pairs)
AI Contour Control II	600 block preview
Automatic corner override	G62
Chopping function	G81.1
Cylindrical interpolation	G07.1
Data server	
Exponential interpolation	
Figure copying	G72.1, G72.2
Handle interruption	
High speed skip function	
Increment system 1/10	
Interpolation type pitch error compensation	
Involute interpolation	G02.2, G03.2
Machining time stamp function	
Manual handle feed 2/3 unit	
No. of Registered programs	1000 / 2000 / 4000 ea
Number of tool offsets	400 / 499 / 999 / 2000 ea
Optional block skip	addition 9 blocks
Part program storage	512kb (1280m) / 1mb (2560m) / 2mb (5120m)/ 4mb(10240m) / 8mb (20480m)
Playback function	
Polar coordinate command	G15 / G16
Position switch	
Programmable mirror image	G50.1 / G51.1
Single direction positioning	G60
Stored stroke check 2 / 3	
Tape format for FS15	
Tool offset	G45 - G48
EZ Guide I with 15" Color TFT	- Doosan machine tools Conversational Programming Solution - When the EZ Guide i is used, the Dynamic graphic display cannot application
Dynamic graphic display (with 15" Color TFT LCD)	- Machining profile drawing. - When the EZ Guide i is used, the Dynamic graphic display cannot application

Fanuc 32i

Control Axes

- Controlled axes — 5 (X, Y, Z, W, B)
- Simultaneous controlled axes — Positioning(G00) /Linear interpolation (G01) : 3 axes; Circular interpolation (G02, G03) : 2 axes
- Backlash compensation
- Emergency stop / overtravel
- Follow up
- Least command increment — 0.001mm / 0.0001(inch)
- Least input increment — 0.001mm / 0.0001(inch)
- Machine lock — all axes / Z axis
- Stored pitch error compensation — Pitch error offset compensation for each axis
- Stored stroke check 1 — Overtravel controlled by software

Interpolation & Feed Function

- 2nd reference point return — G30
- Automatic corner deceleration
- Circular interpolation — G02, G03
- Dwell — G04
- Feed per minute — mm/min(ipm)
- Feedrate clamp by circular radius
- Feedrate override (10% increments) — 0 - 200%
- Helical interpolation
- Jog feedrate — 0 - 5000 mm/min
- Linear ACC/DEC before interpolation
- Linear interpolation — G01
- Manual handle feedrate — 0.1/0.01/0.001mm
- NANO AICC (AI Contour Control) — 200 block preview
- Override cancel — M48 / M49
- Positioning — G00
- Program restart
- Rapid traverse override — F0 (fine feed), 25 / 50 / 100 %
- Reference point return — G27, G28, G29
- Skip function — G31
- Thread cutting, synchronous cutting

Spindle & M-code Function

- M- code function — M 3 digits
- Polar coordinate interpolation — G12.1 / G13.1
- Rigid tapping — G84, G74
- Scaling
- Spindle orientation
- Spindle serial output
- Spindle speed command — S5 digits
- Spindle speed override — 10 - 150%

Programming & Editing Function

- Additional work coordinate system (48 Pair) — G54.1 P1 - 48 pairs
- Auto. Coordinate system setting
- Background editing
- Canned cycle — G73, G74, G76, G80 - G89, G99
- Circular interpolation by radius programming
- Coordinate system rotation — G68, G69
- Custom macro B
- Custom size — 512kb
- I / O interface — USB/RS-232C
- Inch / metric conversion (— G20 / G21
- Local / Machine coordinate system — G52 / G53
- Macro executor
- Maximum commandable value — ±99999.999mm (±9999.9999 inch)
- No. of Registered programs — 500 ea
- Optional block skip
- Optional stop — M01
- Part program storage — 256kb (640m)
- Program number — O4-digits
- Program protect
- Program stop / end — M00 / M02, M30
- Programmable data input — Tool offset and work offset are entered by G10, G11
- Sub program — Up to 4 nesting
- Tape code — ISO / EIA Automatic discrimination
- Work coordinate system — G54 - G59

Others Funtion (Operation, Setting & Display, etc)

- Alarm display
- Cycle start / Feed hold
- Display of PMC alarm message — Message display when PMC alarm occurred
- Dry run
- Ethernet function (Embeded)
- External data input
- Graphic display — Tool path drawing
- Help function
- MDI / DISPLAY unit — 15" color LCD, Keyboard for data input, soft-keys
- Memory card interface
- Multi language display
- Operation functions — Tape / Memory / MDI / Manual
- Program restart
- Search function — Sequence NO. / Program NO.
- Servo setting screen
- CNC screen display
- CNC screen dual display function

Optional Functions

- 3rd / 4th reference return
- Addition of tool pairs for tool life management — 512 pairs
- Additional controlled axes — max. 6 axes in total
- Additional work coordinate system — G54.1 P1 - 300 (300 pairs)
- AI HPCC* (High Precision Contour Control) with 64 bit Risc — 600 block preview
- Automatic corner override — G62
- Chopping function — G81.1
- Cylindrical interpolation — G07.1
- Handle interruption
- High speed skip function
- Increment system 1/10
- Interpolation type pitch error compensation
- Manual handle feed 2/3 unit
- Machining time stamp function
- No. of Registered programs — 1000 ea
- Number of tool offsets — 400 ea
- Optional block skip addition — 9 blocks
- Part program storage — 512kb(1280m)/1mb(2560m)
- Polar coordinate command — G15 / G16
- Position switch
- Stored stroke check 2 / 3
- Programmable mirror image — G50.1 / G51.1
- Tool position offset — G45 - G48
- EZ Guide I with 15" Color TFT — - Doosan machine tools Conversational Programming Solution; - When the EZ Guide i is used, the Dynamic graphic display cannot application
- Dynamic graphic display (with 15" Color TFT LCD) — - Machining profile drawing.; - When the EZ Guide i is used, the Dynamic graphic display cannot application

NC Unit Specifications

DOOSAN Fanuc i Plus

Control Axes

- Controlled axes	5 (X, Y, Z, W, B)
- Simultaneously controllable axes	Positioning(G00)/Linear interpolation(G01) : 3 axes Circular interpolation(G02, G03) : 2 axes
- Backlash compensation	
- Emergency stop / overtravel	
- Follow up	
- Least command increment	0.001mm (0.0001 inch)
- Least input increment	0.001mm (0.0001 inch)
- Machine lock	all axes / Z axis
- Mirror image	Reverse axis movement (setting screen and M-function)
- Stored pitch error compensation	Pitch error offset compensation for each axis
- Stored stroke check 1 Overtravel controlled by software	
- Interpolation type pitch error compensation	

Interpolation & Feed Function

- 2nd reference point return	G30
- Circular interpolation	G2, G3
- Cylinderical interpolation	G07.1
- Dwell	G4
- Exact stop check	G09, G61 (mode)
- Feed per minute (mm/min)	
- Feedrate override	0 - 200 %
- Helical interpolation	
- Jog override	0 - 200 %
- Linear interpolation	G01
- Manual handle feed 1 unit	
- Manual handle feedrate	0.1 / 0.01 / 0.001 mm
- override cancel	M48 / M49
- Positioning (	G00
- Rapid traverse override	F0 (fine feed), 25 / 50 / 100 %
- Reference point return	G27, G28, G29
- Skip function	G31
- Fine Surface Machining	

Operation, Setting & Display, etc

- 3rd / 4th reference return	
- Additional work coordinate system	G54.1 P1 - 48 (48 pairs)
- AICC II (200 block)	
- Alarm display	
- Alarm history display	
- Automatic corner override G62	
- Clock function	
- coordinate rotation	G68, G69
- Cycle start / Feed hold	
- display of PMC Alarm message	Message display when PMC alarm occurred
- Machine condition selection function	
- Embeded ethernet	
- Dry run	
- Graphic display	Tool path drawing
- Help function	
- High speed Skip function	
- MDI / display unit	15" color LCD, Keyboard for data input, 'soft-keys
- EZ Guide i (Doosan Conversational Programming Solution) with 15" Color TFT	
- Memory card interface	
- Operation functions	Tape / Memory / MDI / Manual
- Operation history display	
- Optional angle chamfering / corner R	
- Polar coordinate command	G15 / G16
- program restart	
- Programmable data input	
- Tool offset and work offset are entered by	G10, G11
- Programmable Mirror image	G50.1 / G51.1
- run hour and Part number display	
- Scaling	G50, G51
- Search function	Sequence No. / program No.
- Self - diagnostic function	
- Servo setting screen	
- Single block	
- Single direction Positioning	G60
- Stored stroke check 2	

Spindle & M-code Function

- M- code function	M 3 digits
- Spindle orientation	
- Spindle serial output	
- Spindle speed command	S5 digits
- Spindle speed override	10 - 150 %

Tool Function

- Tool nose radius compensation	G40, G41, G42
- Number of tool offsets	400 ea
- Tool length compensation	G43, G44, G49
- Tool life management	
- Tool number command	T2 digits
- Tool offset memory C	Geometry / Wear and Length / Radius offset memory
- Tool Position offset	G45 - G48

Programming & Editing Function

- Absolute / Incremental programming	G90/G91
- Automatic coordinate system setting	
- Background editing	
- Circular interpolation by radius Programming	
- Custom macro	
- Macro executor + C language executor	
- Fanuc picture executor	
- Addition of Custom macro common variables	(#100 - #199, #500 - #999)
- Decimal point input	
- Extended Part program editing	
- Inch / metric conversion	G20 / G21
- Label Skip	
- Maximum commandable value	±99,999.999 mm (±9,999.9999 inch)
- No. of Registered programs	1000 ea
- Optional block Skip	
- Optional stop	M1
- Part program storage	2MB (5120m)
- Playback function	
- program number	O4-digits
- program protect	
- Program stop / end	M00 / M02,M30
- Rigid tapping bell-shaped acceleration/deceleration	
- Sub program Up to 4 nesting	
- Tape code ISO / EIA Automatic discrimination	
- Thread cutting	
- Work coordinate system	G54 - G59

Optional Specifications

- Additional controlled axes, max. 6 axes in total	
- AICC II (AI Contour Control II)	400 block preview
- Fast data server	
- EZ Guide i (Conversational Programming Solution)*1)	
- iHMI with Machining Cycle *2)	

*1) Only with 15" LCD standard
*2) Only with 15" Touch LCD standard

HEIDENHAIN TNC 640

Control Axes

- Controlled axes	5 (X, Y, Z, W, B)
- Simultaneous controlled axes	Positioning / Linear interpolation 5 axes Circular interpolation 2 axes Helical interpolation 3 axes
- Backlash compensation	
- Least command increment	0.001mm / 0.0001(inch)
- Least input increment	0.001mm / 0.0001(inch)
- Linear axis error compensation	
- Reversal peaks with circular movement compensation	
- Stick-slip friction compensation	

Interpolation & Feed Function

- Circle	In 3 axes
- Feedfoward	
- Feedrate override	0 -150 %
- Feed hold	std.
- Helix interpolation	
- Manual handwheel feed	1 unit
- Optional block skip	
- Single block	
- Spline interpolation	
- Straght line In	5 axes

SPINDLE FUNCTION

- Spindle orientation	
- Spindle position control	
- Spindle speed override	0 - 150%

Tool Function

- 3 dimensional tool compensation	
- Number of tool offset	999 ea
- Tool management	

Spindle & M-code Function

- Acture position capture	
- Caculator	
- Comment and structure blocks in the NC program	
- Complete list of all current error messages	
- Context-sensitive help function for error message	
- Datum tables	
- Graphical support for programming cycles	
- Graphic simulation	
- Heidenhain conversation format programmi	
- Mathematical function	
- No. of registered program	No limit
- Plane view	
- Programming graphics	
- Programming with variable	Q parameters
- Program memory	Approx 26GB on hard disk
- Returning to the contour	
- The integrated help system TNC guide	

Others Funtion (Operation, Setting & Display, etc)

- Actual speed display	
- Alarm display	
- Clock function	
- Diagnostic function	
- Display	TFT 15" color
- Ethernet TCP / IP	
- Integrated oscilloscope	
- Log(error message and keystroke) use PCs	
- Trace function	
- USB USB1.1	

Optional Specifications

- Display	TFT 15" color
- DCM Collision	
- DXF Converter	
- Heidenhain DNC	
- KinematicsOpt	
- Tool touch probes	TT-series, TL Series
- Workpiece touch probes	TS-series

* FOR A HEIDENHAIN NC, PLEASE CONTACT US.

NC Unit Specifications

SIEMENS

● Standard ○ Optional X Not applicable

No.	Division	Item	Spec.	S840Dsl
1	Axes control	Controlled axes	3 axes	-
2			4 axes	-
3			5 axes	X, Y, Z, B
4		Additional controlled axes	Max. 31 axes in total(S840Dsl) /Max. 8 axes in total(S828D)	○
5		Simultaneously controlled axes	Positioning(G00)/Linear interpolation(G01) : 3 axes Circular interpolation(G02, G03) : 2 axes	X
6			Positioning(G00)/Linear interpolation(G01) : 4 axes Circular interpolation(G02, G03) : 2 axes	●
7			Positioning(G00)/Linear interpolation(G01) : 5 axes Circular interpolation(G02, G03) : 2 axes	X
8		Backlash compensation		●
9		Leadscrew error compensation		●
10		Measuring system error compensation		●
11		Feedforward control	velocity-dependent	●
12		Follow up mode		●
13		Programmable acceleration		●
14		Emergency stop / overtravel		●
15		Least command increment	0.001mm (0.0001 inch)	●
16		Least input increment	0.001mm (0.0001 inch)	●
17			0.0001mm (0.0001 inch)	X
18		Maximum commandable value	±99999.999mm (±3937 inch)	●
19		Machine lock (PRT)	All axes	●
20		Position switching signals/cam controller		●
21		Absolute encoder		●
22		Travel to fixed stop with Force Control		○
23	Interpolation & Feed function	Dry run		●
24		Feedrate/Rapid override	0 - 120 %	●
25		Reference point return	G75 FP=1	●
26		2nd reference point return	G75 FP=2	●
27		3rd / 4th reference return	G75 FP=3, 4	●
28		Advanced surface		●
29		Top surface		○
30		Linear interpolation	Max. 4	●
31		Circular interpolation	G02, G03	●
32		Inverse time feedrate	G93	●
33		Helical interpolation		●
34		Universal interpolator NURBS		●
35		Polynomial interpolation		○
36		Spline interpolation (A, B and C splines)		●
37		Involute interpolation		○
38		Dwell	G04	●
39		Separate path feed for corners and chamfers		●
40		Reposition		●
41		Acceleration with Jerk limitation		●
42		Compressor for 3-axis machining		●
43		Compressor for 5-axis machining		X
44		Temperature compensation		X
45		Positioning	G00	●
46		Look ahead number of block	S/W version 4.5	150
47			S/W version 4.7	1000
48			S/W version 4.8	1000
49		Cartesian point-to-point (PTP) travel		●
50		TRANSMIT/cylinder surface transformation		●
51		Inclined axis		X
52		Inclined axis TRAANG after TRANSMIT/TRACYL		●
53	Spindle & M code function	Spindle speed, digital setpoint		●
54		Spindle speed, max. programmable value range	106 ... 0.0001 (display: ± 999999999.9999)	●
55		Spindle override	50 - 120 %	●
56		Automatic gear state selection		●
57		Oriented spindle stop		●
58		Spindle speed limitation min./max.		●
59		Constant cutting rate		●
60		Spindle control via PLC (Positioning, oscillation)		●
61		Changeover to axis mode		●
62		Tapping with compensating chuck/rigid tapping		●
63	Tool function	Tool radius compensations in plane		
64		• With approach and retract strategies		●
65		• With transition circle/ellipse on outer edges		●
66		3D Tool radius compensation		○
67		Number of tools/cutting edges in tool list	768/1536	X
68			600/1500	●
69		Tool length compensation		●
70		Operation with tool management		●
71		Tool list		●
72		Tool offset selection via T and D numbers		●
73		Replacement tools for tool management		●
74		Monitoring of tool life and workpiece count		●
75		Manual measurement of tool offset		●
76		Magazine list		●
77		Loading and unloading of tools		●

● Standard ○ Optional X Not applicable

No.	Division	Item	Spec.	S840Dsl
78	Programming & Editing function	Programming language (DIN 66025 and high-level language expansion)		●
79		Main program call from main program and subprogram		●
80		Subprogram levels and interrupt routines, max.		16/2
81		Number of subprogram passes <= 9999		●
82		Number of levels for skip blocks		8
92		Number of levels for skip blocks, maximum 10		X
93		Polar coordinates		●
94		1/2/3-point contours		●
95		Dimensions metric/inch, changeover manually or via program		●
96		Auxiliary function output		
97		• Via M word, max. programmable value range: INT 2^{31}-1		●
98		• Via H word, max. range: REAL ± 3.4028 ex 38, INT -231 ... 2^{31}-1		●
99		CNC High-level language with		
100		• User variables, configurable		●
101		• Read/write system variables		●
102		• Indirect programming		●
103		• Program jumps and branches		●
107		• Program coordination with WAIT, START, INIT		●
108		• Arithmetic and trigonometric functions		●
109		• Compare operations and logic combinations		●
110		• Macro techniques		●
111		• Control structures IF-ELSE-ENDIF		●
112		• Control structures WHILE, FOR, REPEAT, LOOP		●
113		• STRING functions		●
114		Program functions		
119		• Dynamic preprocessing memory FIFO		●
120		• Frame concept		●
121		• Inclined-surface machining with swivel cycle		●
122		• Axis/spindle replacement		●
123		• Geometry axes, switchable online in the CNC program		●
124		• Program preprocessing		●
125		Online ISO dialect interpreter		●
126		Program/workpiece management		
127		• Parts programs on (PPU or NCU), max. number		1000
128		• Workpieces on (PPU or NCU), max. number		250
129		• Workpieces on Hard disk, max. number		○
130		• In additional HMI user memory on CF card		●
131		• On additional plug-in CF card		X
132		• On integral Hard disk PCU50.5		○
133		• On USB storage medium (e.g. disk drive, USB stick)		●
134		• On network drive		●
135		• Templates for workpieces, programs and INI files		●
136		• Job lists		●
137		Basic frames, max. number		16
138		Settable offsets, max. number	G54, G55, G56 ...	100
139		Zero/work offsets, programmable (frames)		●
140		Scratching, determining zero/work offset		●
141		Work offsets, external via PLC		●
142		Global and local user data		●
143		Global program user data		●
144		Display system variables		○
145		Program editor		
146		• Programming support for cycles program (Program Guide)		●
147		• Dual editor		●
148		• CNC editor with editing functions: Marking, copying, deleting		●
149		• Programming graphics/free contour input contour calculator)		●
150		• Screens for 1/2/3-point contours (contour definition programming)		●
151		• Support for parameter input Animated Elements		●
152		• Shopturn/ShopMill Machining step programming		●
153		Technology cycles for drilling/milling		●
154		Pocket milling free contour and islands stock removal cycle		●
155		Residual material detection		●
156		Access protection for cycles		○
157		Programming support can be extended, e.g. customer cycles		●
158		Quck view for mold making program		●
159		2D simulation		●
160		3D simulation, finished part		●
161		Simultaneous recording		●
162		Measure kinematics		X
163		DXF Reader for PC integrated in SINUMERIK Operate		○

No.	Division	Item	Spec.	S840Dsl
164	OTHERS FUNCTIONS (Operation, setting & Display, etc)	JOG		
165		• Handwheel selection		●
166		• Switchover: inch/metric		●
167		• Manual measurement of zero/work offset		●
168		• Manual measurement of tool offset		●
169		• Automatic tool/workpiece measurement		●
170		• Reference point approach, automatic/via CNC program		●
171		MDA		
172		• Input in text editor		●
173		• Save MDA program		●
174		• Input screen forms for technology and positioning, cycle support		●
175		Teach-in		●
176		Automatic		
177		• Execution from USB interface on operator panel front		●
178		• Execution from HMI memory on NCU CF card		●
179		• Execution from network drive		●
180		• Execution from Hard disk (PCU50.5)		○
181		• Program control		●
182		• Program editing		●
183		• Overstoring		X
184		• DRF offset		●
185		• Block search with/without calculation		●
186		CNC user memory expanded for programs	< 100MB	○
187		Execution from external storage EES		○
188		Repos (repositioning on the contour)		
189		• With operator command/semi-automatically		●
190		• Program-controlled		●
191		Preset		
192		• Set actual value		●
193		10.4" color display		○
194		15.0" color display		X
195		19.0" color display		X
196		15.6" color display with touch screen		●
197		18.5" color display with touch screen		○
198		Plain text display of user variables		●
199		Multi-channel display		○
200		2D representation of 3D protection areas/work areas		●
201		Actual-value system for workpiece		●
202		CNC program messages		●
203		Screen blanking		●
204		Access protection, 7 levels		●
205		Operating software languages		
206		• Ch_S, En, Fr, Gr, It, Sp		●
207		• Ch_T, Kr, Pt		○
208		• Additional languages, use of language extensions		○
209		Working area limitation		●
210		Limit switch monitoring (Software and hardware limit switches)		●
211		Position monitoring		●
212		Standstill (zero-speed) monitoring		●
213		Clamping monitoring		●
214		2D/3D protection areas		●
215		Contour monitoring		●
216		Axis limitation from the PLC		●
217		Alarms and messages		●
218		Action log can be activated for diagnostic purposes		●
219		PLC status		●
220		Remote Control System (RCS) remote diagnostics		
221		• RCS Host remote diagnostics function		○
222		• RCS Commander (viewer function)		●
223		Integrated service planner for the monitoring of service intervals		●
224		Automatic measuring cycles		●
225		Easy Extend		X
226		Contour handwheel		○
227		Integrate screens in SINUMERIK Operate with SINUMERIK Integrate Run MyScreens		●
228		Cross-mode actions (ASUPs and synchronized actions in all operating modes)		●
229		Axis collision protection PROT		○
230		Collision avoidance ECO (machine, working area)		
231		Collision avoidance (machine, working area)		○
232		MDynamics 3-axis		●
233		MDynamics 5-axis		X

Responding to Customers Anytime, Anywhere

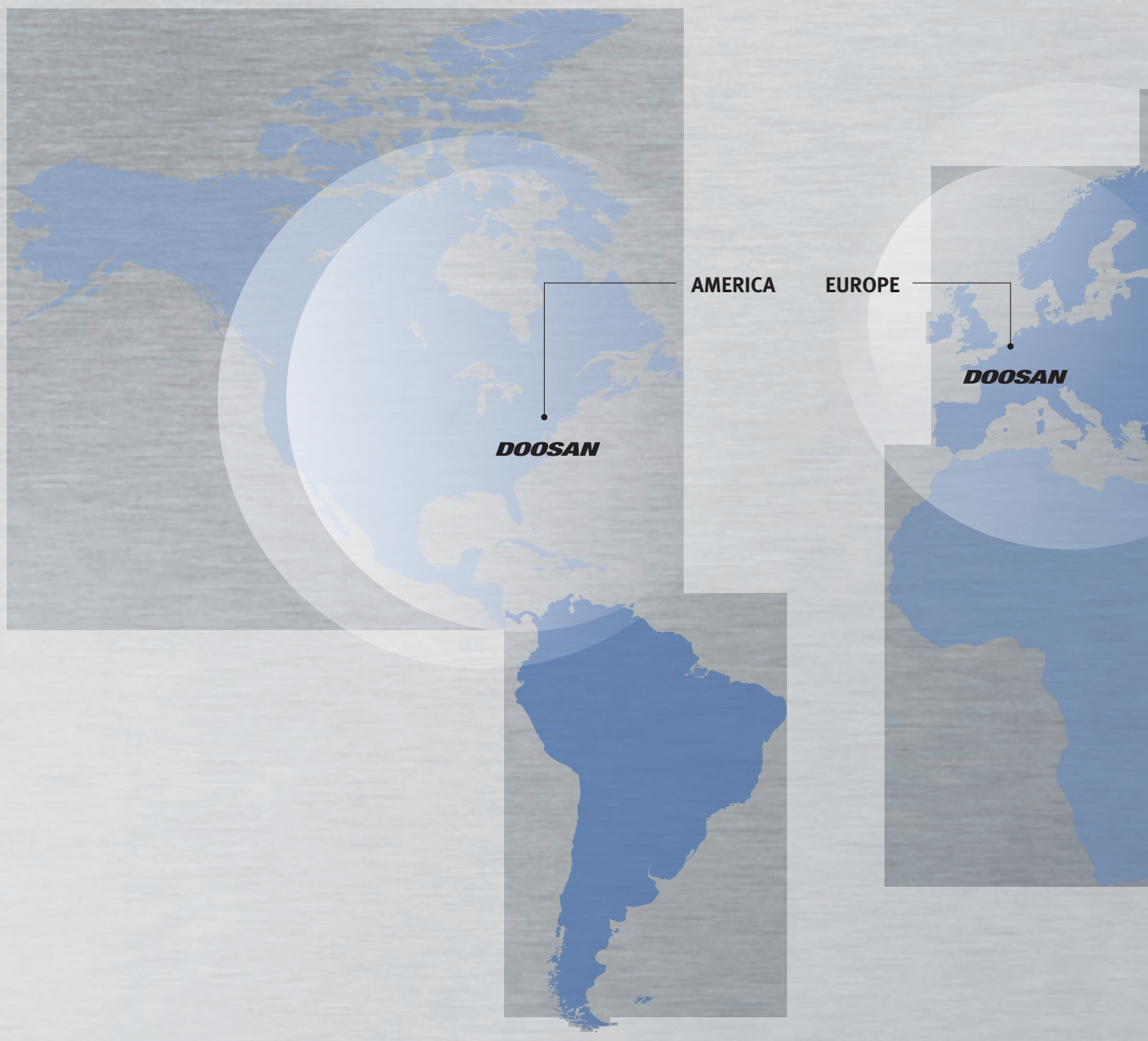

Global Sales and Service Support Network

Corporations	Dealer Networks	Technical Centers	Service Post	Factories
4	164	51	198	3

Technical Center: Sales Support, Service Support, Parts Support

Doosan Machine Tools' Global Network, Responding to Customer's Needs nearby, Anytime, Anywhere

Doosan machine tools provides a system-based professional support service before and after the machine tool sale by responding quickly and efficiently to customers' demands. By supplying spare parts, product training, field service and technical support, we can provide top class support to our customers around the world.

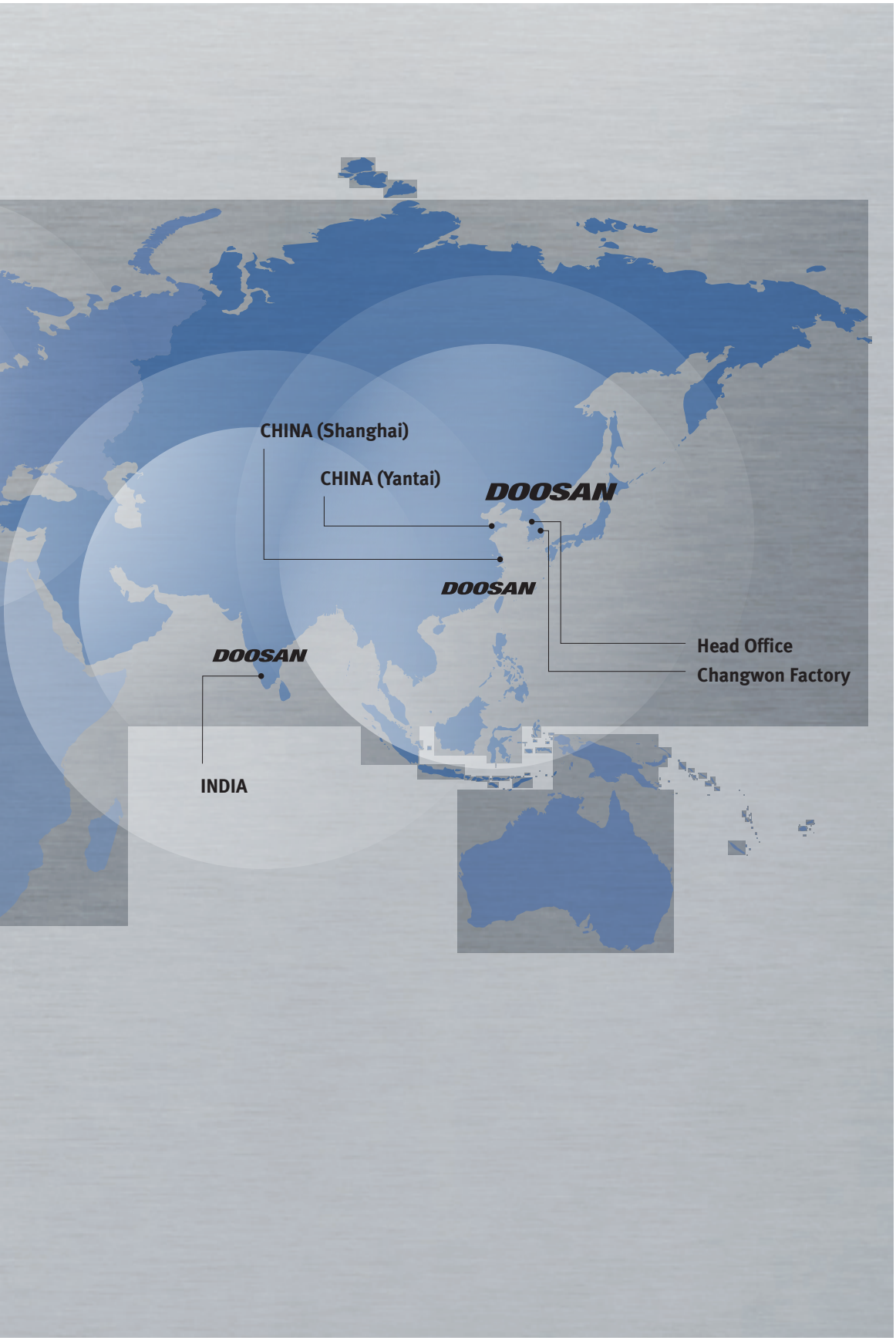

Customer Support Service

We help customers to achieve success by providing a variety of professional services from pre-sales consultancy to post-sales support.

Supplying Parts

- Supplying a wide range of original Doosan spare parts
- Parts repair service

Field Services

- On site service
- Machine installation and testing
- Scheduled preventive maintenance
- Machine repair

Technical Support

- Supports machining methods and technology
- Responds to technical queries
- Provides technical consultancy

Training

- Programming / machine setup and operation
- Electrical and mechanical maintenance
- Applications engineering

Major Specifications

DBC series

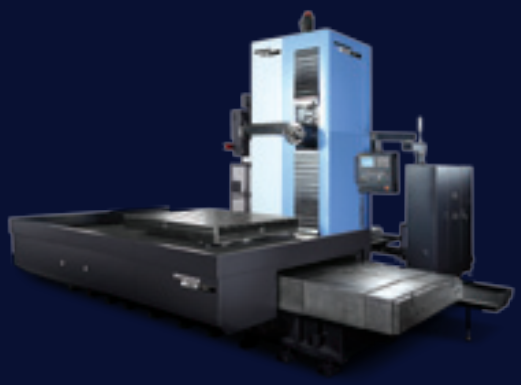

Model	X / Y / Z / W axes travel distance mm (inch)	Table size mm (inch)	Max. spindle speed r/min	Spindle motor kW (Hp)
DBC 110S	2000 / 1500 / 1200 / 500 (78.7 / 59.1 / 47.2 / 19.7)	1400 x 1600 (55.1 x 63.0)	3000	26 (34.9)
DBC 130S	2000 / 1500 / 1200 / 600 (78.7 / 59.1 / 47.2 / 23.6)	1400 x 1600 (55.1 x 63.0)	2500	30 (40.2)
DBC 130SL	2500 / 2000 / 1500 / 600 (98.4 / 78.7 / 59.1 / 23.6)	1400 x 1800 (55.1 x 70.9)	2500	30 (40.2)
DBC 110 Ⅱ	2500 / 2000 / 1500 / 550 (98.4 / 78.7 / 59.1 / 21.7)	1400 x 1800 (55.1 x 70.9)	4000	26 (34.9)
DBC 130 Ⅱ	3000 / 2000 / 1600 / 700 (118.1/ 78.7 / 63.0 / 27.6)	1600 x 1800 (63.0 x 70.9)	3000	26 (34.9)
DBC 130L Ⅱ	4000 / 2500 / 2000 / 700 (157.5 / 98.4 / 78.7 / 27.6)	1600 x 1800 {1800 x 2000, 2000 x 2200} (63.0 x 70.9 {70.9 x 78.7, 78.7 x 86.6})	3000	26 (34.9)
DBC 160	4000 / 2500 / 1600 / 800 (157.5 / 98.4 / 63.0 / 31.5)	2000 x 2200 (78.7 x 86.0)	2000	45 (60.3)
DBC 160L	5000* / 3000* / 2000 / 800 (196.9 / 118.1 / 78.7 / 31.5)	2000 x 2200 (78.7 x 86.0)	2000	40 (53.6) {60 / 90 (80.5 / 120.7) }
DBC 250 Ⅱ	3000 / 2000 / 1600 / 500 (118.1 / 78.7 / 63.0 / 19.7)	1600 x 1800 {1800 x 2000, 2000 x 2200} (63.0 x 70.9 {70.9 x 78.7, 78.7 x 86.6})	6000	30 (40.2)
DBC 250L Ⅱ	4000 / 2500 / 2000 / 500 (157.5 / 98.4 / 78.7 / 19.7)	1600 x 1800 {1800 x 2000, 2000 x 2200} (63.0 x 70.9 {70.9 x 78.7, 78.7 x 86.6})	6000	30 (40.2)

*{ } Option

Doosan Machine Tools

www.doosanmachinetools.com

Head Office
22F T Tower, 30, Sowol-ro 2-gil, Jung-gu, Seoul, Korea, 04637
Tel +82-2-6972-0370 / 0350
Fax +82-2-6972-0400

Doosan Machine Tools America
19A Chapin Rd., Pine Brook, NJ 07058, U.S.A.
Tel +1-973-618-2500
Fax +1-973-618-2501

Doosan Machine Tools Europe
Emdener Strasse 24, D-41540 Dormagen, Germany
Tel +49-2133-5067-100
Fax +49-2133-5067-111

Doosan Machine Tools India
No.82, Jakkuar Village, Yelahanka Hobil, Bangalore-560064
Tel + 91-80-2205-6900
E-mail india@doosanmt.com

Doosan Machine Tools China
Room 101,201,301, Building 39 Xinzhuan Highway No.258 Songjiang District,China Shanghai(201612)
Tel +86 21-5445-1155
Fax +86 21-6405-1472

* For more details, please contact Doosan Machine Tools.
* The specifications and information above-mentioned may be changed without prior notice.
* Doosan Machine Tools Co., Ltd. is a subsidiary of MBK Partners. The trademark DOOSAN is used under a licensing agreement with Doosan Corporation, the registered trademark holder.

Fire Safety Precautions | There is a high risk or fire when using non-water-soluble cutting fluids, processing flammable materials, neglecting use coolants and modifying the machine without the consent of the manufacturer. Please check the SAFETY GUIDANCE carefully before using the machine.

ver. EN 200220 SU